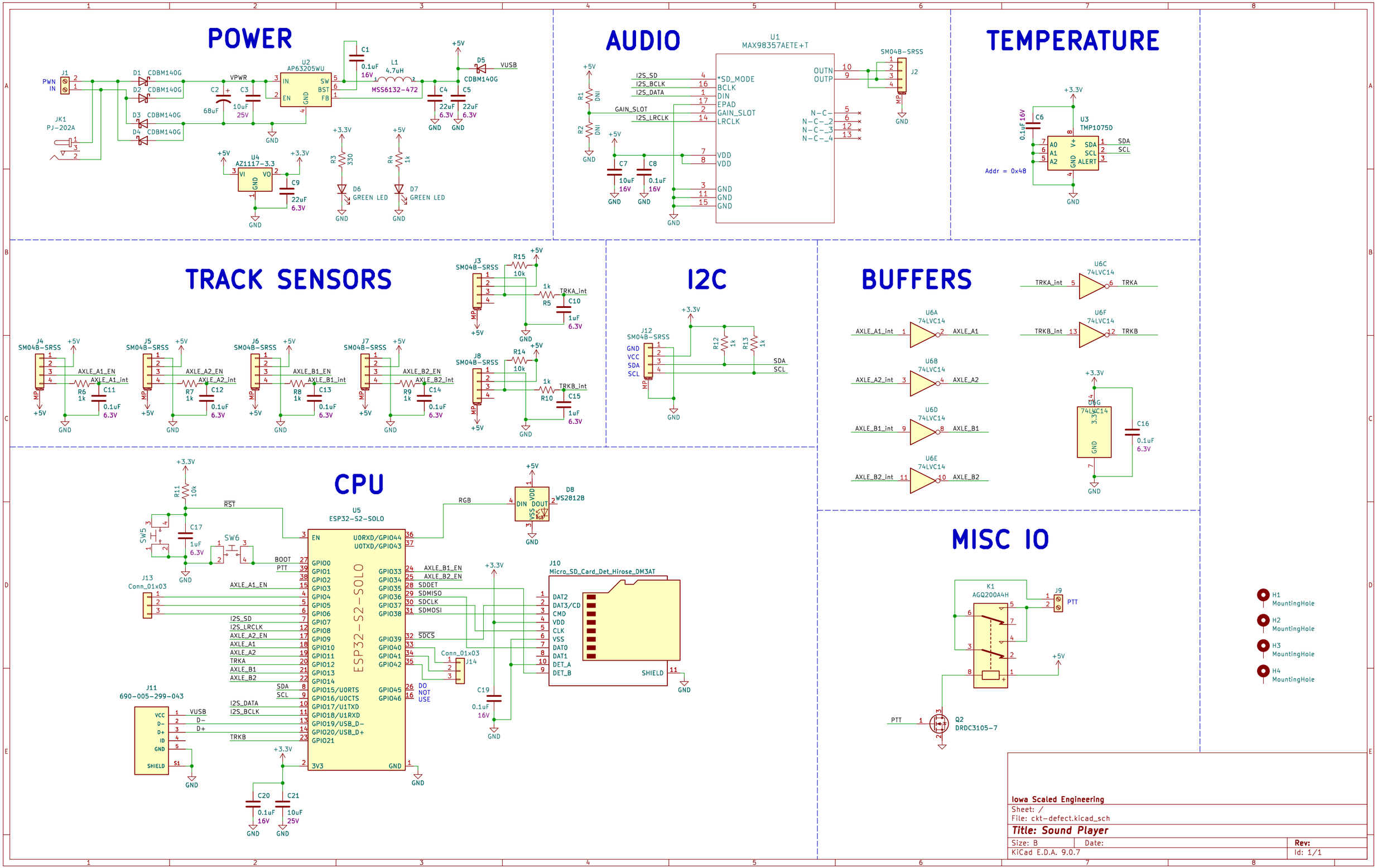

Iowa Scaled Engineering

Sheet: /

File: ckt-defect.kicad_sch

Title: Sound Player

Size: B	Date:	Rev:
KiCad E.D.A. 9.0.7		Id: 1/1