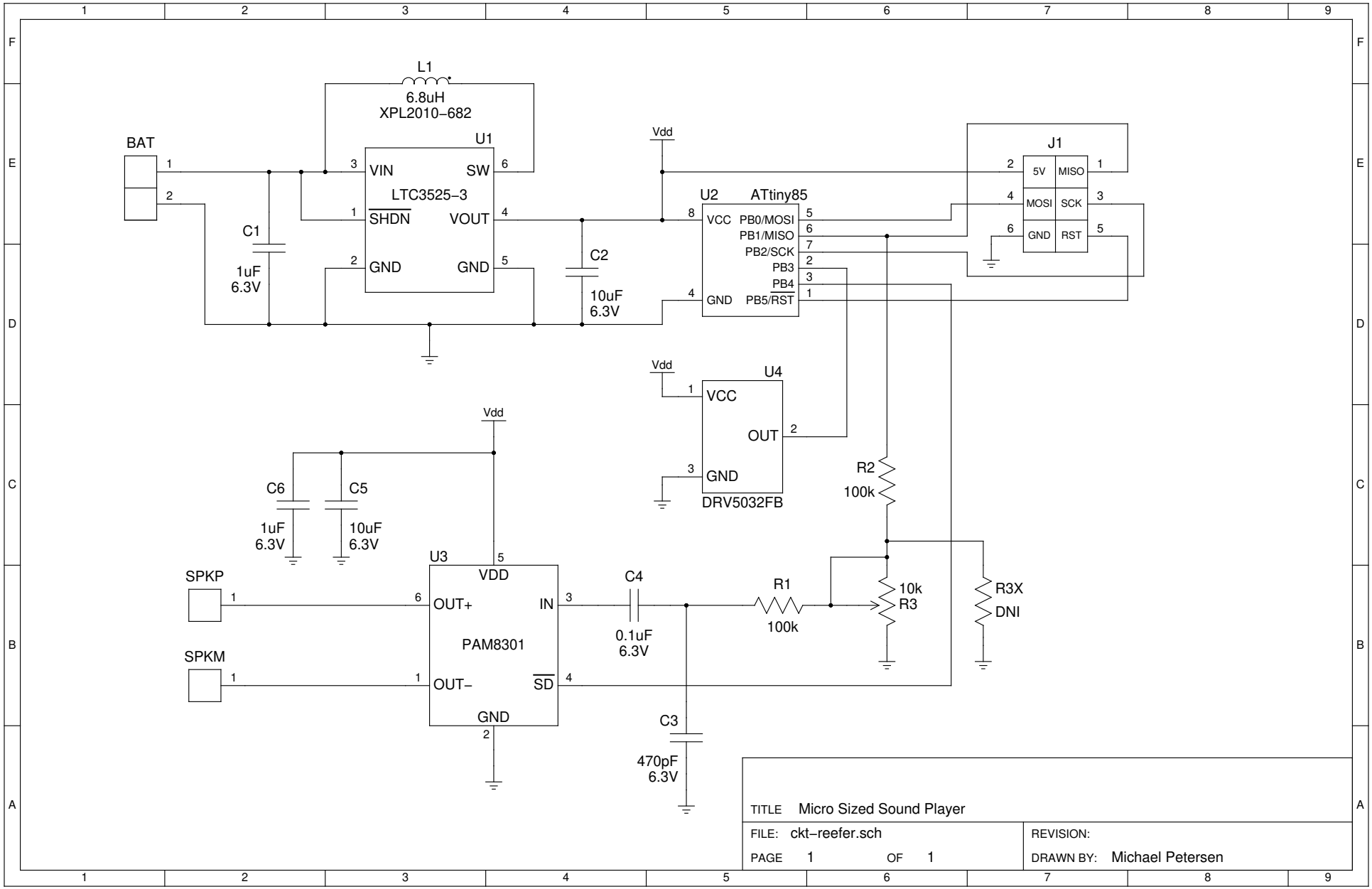
L1
6.8uH
XPL2010−682
BAT
U1
VIN
SW
LTC3525−3
SHDN
VOUT
GND
GND
C1
1uF
6.3V
C2
10uF
6.3V
Vdd
U2
ATtiny85
VCC
PB0/MOSI
PB1/MISO
PB2/SCK
PB3
PB4
GND
PB5/RST
J1
5V
MISO
MOSI
SCK
GND
RST
U4
VCC
OUT
GND
DRV5032FB
R2
100k
C6
1uF
6.3V
C5
10uF
6.3V
U3
VDD
OUT+
IN
PAM8301
OUT−
SD
GND
SPKP
SPKM
C4
0.1uF
6.3V
R1
100k
10k
R3
R3X
DNI
C3
470pF
6.3V
TITLE Micro Sized Sound Player
FILE: ckt−reefer.sch
REVISION:
PAGE 1 OF 1
DRAWN BY: Michael Petersen