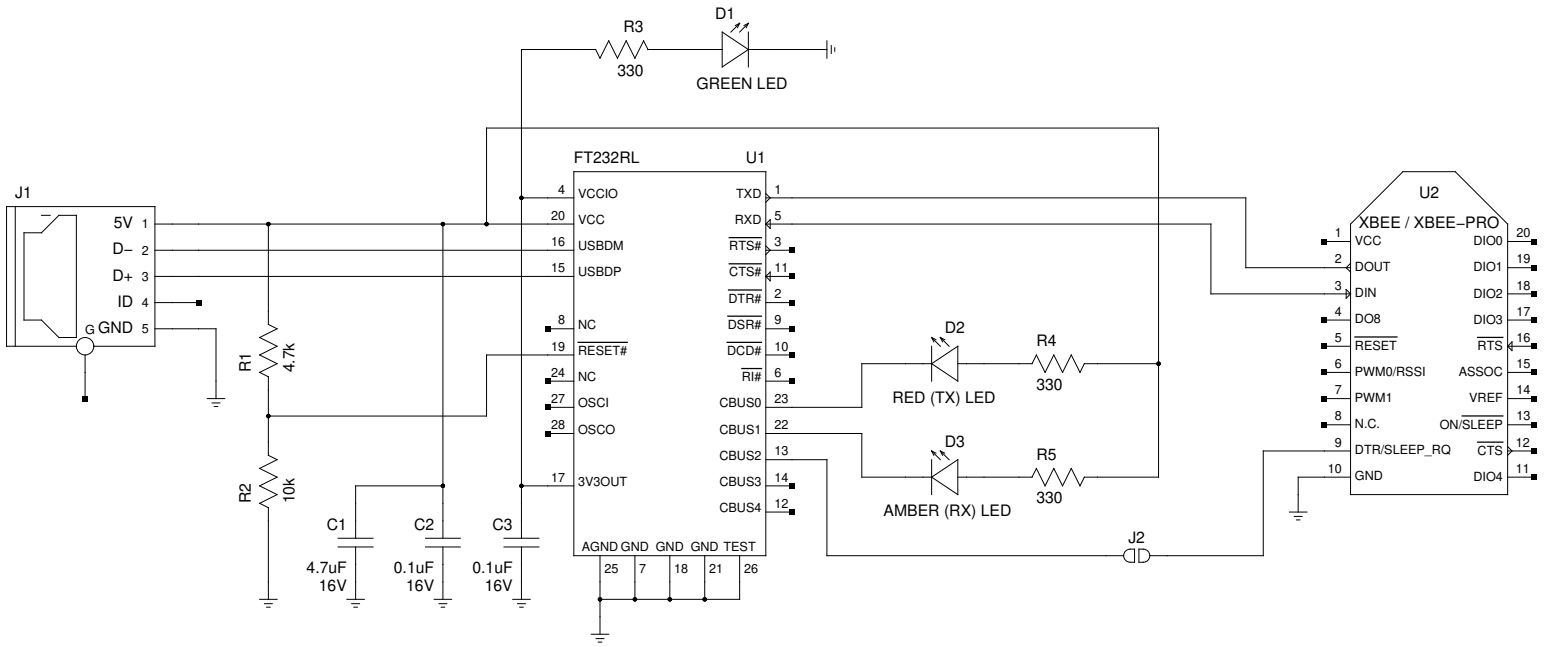

Notes:
1) All capacitors are ceramic (X7R/X5R) unless otherwise noted.
2) All capacitors and resistors are 0805 unless otherwise noted.

TITLE	Transparent XBee to USB Interface		
FILE:	ckt−usbxbee.sch	REVISION:	
PAGE	1 OF 1	DRAWN BY:	Michael Petersen