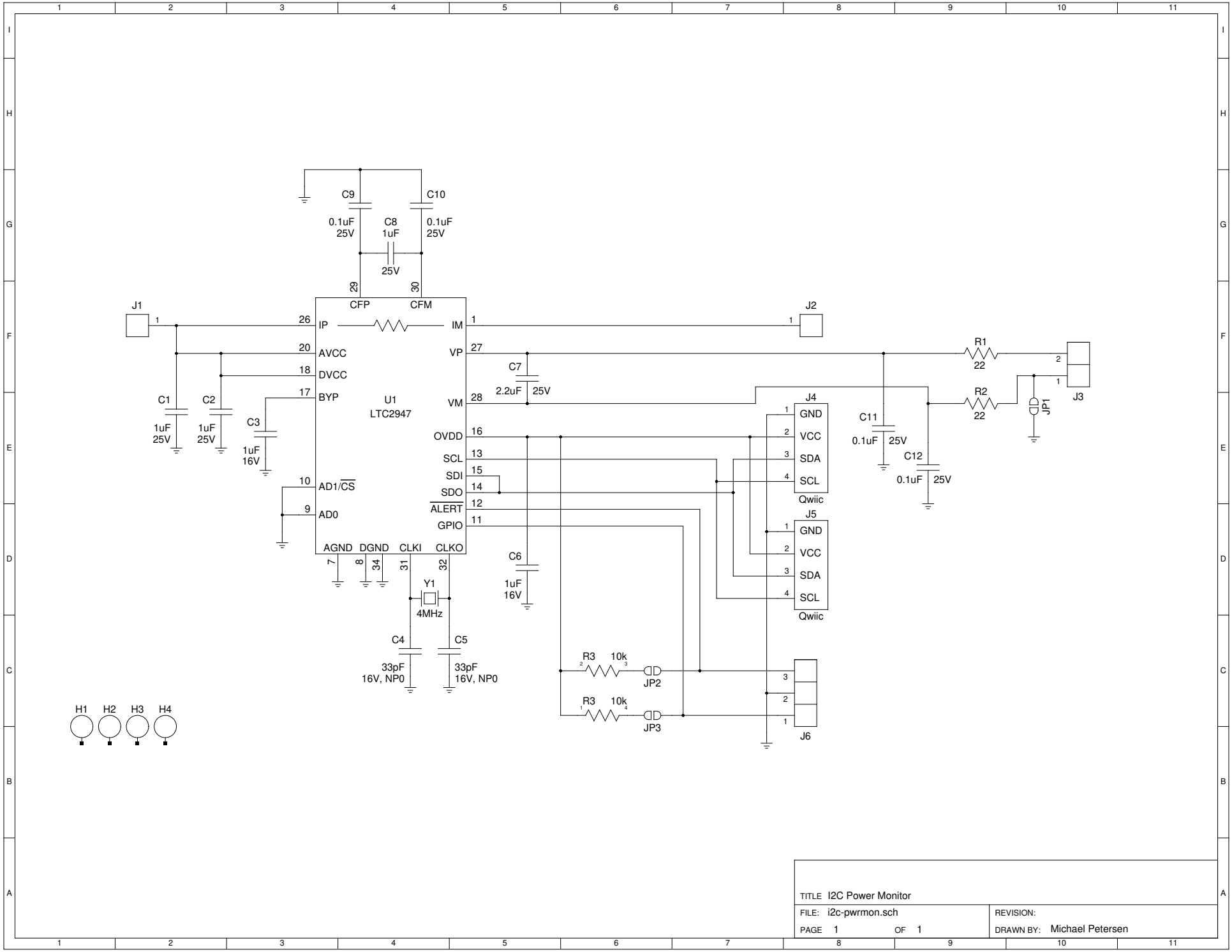

TITLE I2C Power Monitor

FILE: i2c-pwrmon.sch

PAGE 1 OF 1

REVISION:

DRAWN BY: Michael Petersen