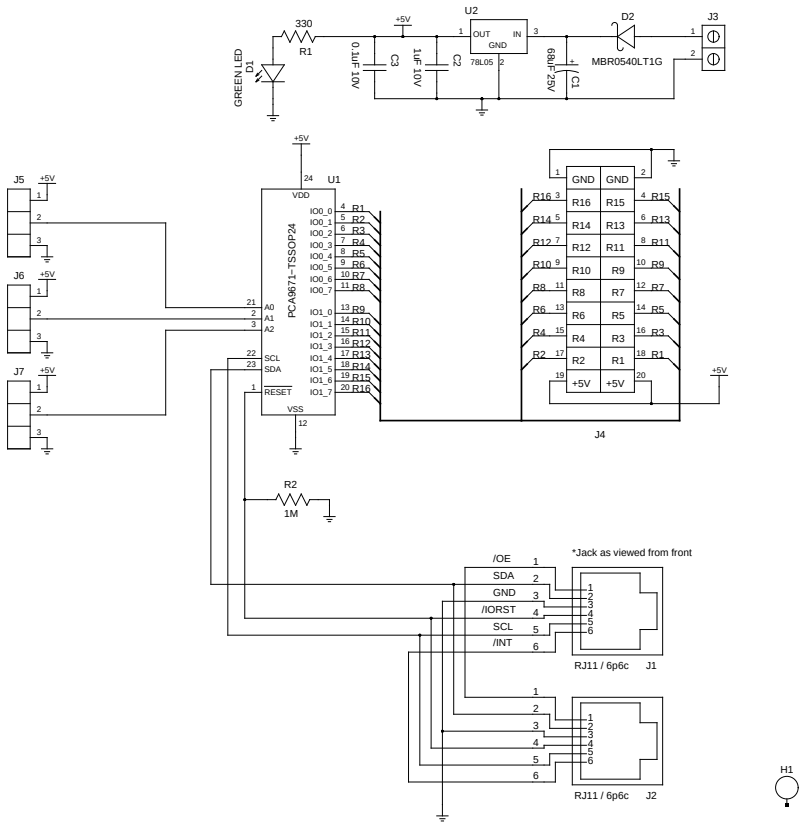

TITLE	I2C 16 Relay Board Driver
FILE: i2c-relay16.sch	REVISION: $Revision: 82 $
PAGE 1 OF 1	DRAWN BY: Nathan D. Holmes