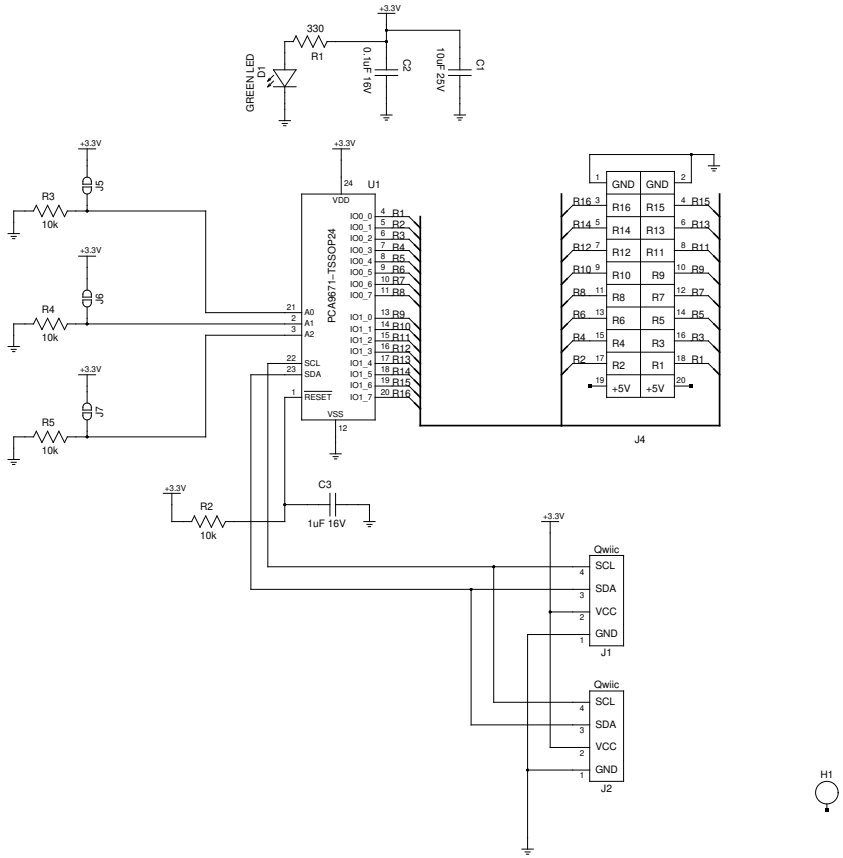

TITLE I2C 16 Relay Board Driver

FILE: i2c-relay16.sch

PAGE 1 OF 1

REVISION: $Revision: 82 $

DRAWN BY: Nathan D. Holmes