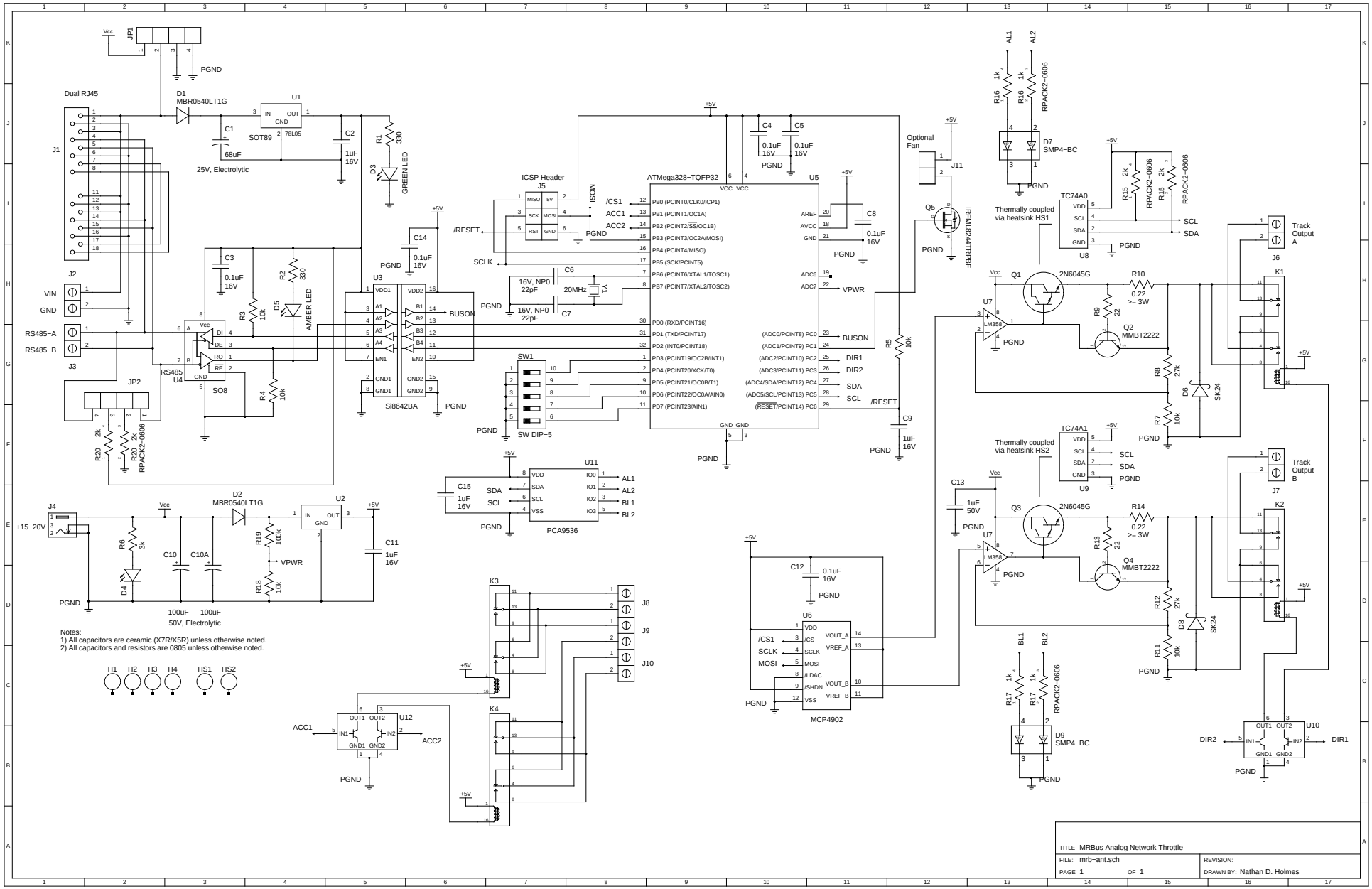
Dual RJ45
J1
J2
VIN
GND
RS485−A
RS485−B
J3
JP1
JP2
PGND
Vcc
D1
MBR0540LT1G
U1
SOT89
78L05
C1
68uF
25V, Electrolytic
C2
1uF
16V
R1
330
D3
GREEN LED
C3
0.1uF
16V
R2
330
D5
AMBER LED
R3
10k
R4
10k
U4
RS485
SO8
R20
2k
R20
RPACK2−0606
U3
Si8642BA
BUSON
C14
0.1uF
16V
ICSP Header
J5
MISO
5V
SCK
MOSI
RST
GND
/RESET
SCLK
MOSI
ATMega328−TQFP32
U5
VCC
GND
C4
0.1uF
16V
C5
0.1uF
16V
/CS1
ACC1
ACC2
PB0 (PCINT0/CLK0/ICP1)
PB1 (PCINT1/OC1A)
PB2 (PCINT2/SS/OC1B)
PB3 (PCINT3/OC2A/MOSI)
PB4 (PCINT4/MISO)
PB5 (SCK/PCINT5)
PB6 (PCINT6/XTAL1/TOSC1)
PB7 (PCINT7/XTAL2/TOSC2)
PD0 (RXD/PCINT16)
PD1 (TXD/PCINT17)
PD2 (INT0/PCINT18)
PD3 (PCINT19/OC2B/INT1)
PD4 (PCINT20/XCK/T0)
PD5 (PCINT21/OC0B/T1)
PD6 (PCINT22/OC0A/AIN0)
PD7 (PCINT23/AIN1)
AREF
AVCC
ADC6
ADC7
VPWR
(ADC0/PCINT8) PC0
(ADC1/PCINT9) PC1
(ADC2/PCINT10) PC2
(ADC3/PCINT11) PC3
(ADC4/SDA/PCINT12) PC4
(ADC5/SCL/PCINT13) PC5
(RESET/PCINT14) PC6
DIR1
DIR2
SDA
SCL
/RESET
C8
0.1uF
16V
C6
16V, NP0
22pF
20MHz
Y1
C7
16V, NP0
22pF
SW1
SW DIP−5
R5
10k
C9
1uF
16V
Optional
Fan
J11
Q5
IRFML8244TRPBF
R16
1k
R16
RPACK2−0606
AL1
AL2
D7
SMP4−BC
TC74A0
U8
Thermally coupled
via heatsink HS1
R15
2k
R15
RPACK2−0606
SCL
SDA
Track
Output
A
J6
K1
Q1
2N6045G
R10
0.22
>= 3W
R9
22
Q2
MMBT2222
U7
LM358
R8
27k
R7
10k
D6
SK24
TC74A1
U9
Thermally coupled
via heatsink HS2
Track
Output
B
J7
K2
Q3
2N6045G
R14
0.22
>= 3W
R13
22
Q4
MMBT2222
R12
27k
R11
10k
D8
SK24
C15
1uF
16V
U11
PCA9536
IO0
IO1
IO2
IO3
AL1
AL2
BL1
BL2
J4
+15−20V
R6
3k
D4
C10
100uF
C10A
100uF
50V, Electrolytic
D2
MBR0540LT1G
U2
R19
100k
R18
10k
VPWR
C11
1uF
16V
C13
1uF
50V
C12
0.1uF
16V
U6
MCP4902
/CS1
SCLK
MOSI
/ICS
SCLK
MOSI
/LDAC
/SHDN
VDD
VSS
VOUT_A
VREF_A
VOUT_B
VREF_B
R17
1k
R17
RPACK2−0606
D9
SMP4−BC
K3
K4
J8
J9
J10
U12
OUT1
OUT2
IN1
IN2
GND1
GND2
U10
DIR2
DIR1
Notes:
1) All capacitors are ceramic (X7R/X5R) unless otherwise noted.
2) All capacitors and resistors are 0805 unless otherwise noted.
H1
H2
H3
H4
HS1
HS2
TITLE MRBus Analog Network Throttle
FILE: mrb−ant.sch
PAGE 1 OF 1
REVISION:
DRAWN BY: Nathan D. Holmes