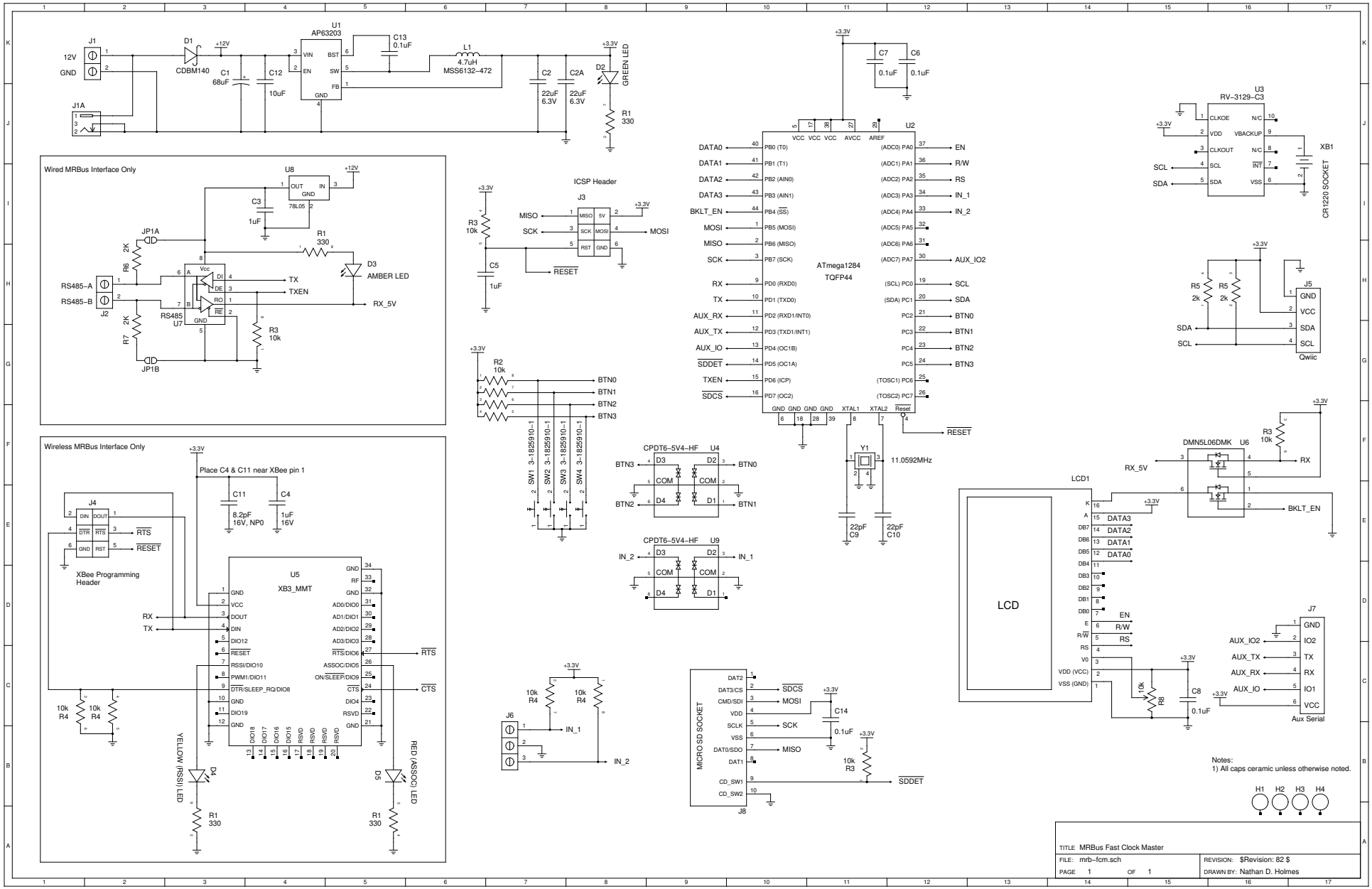
Wired MRBus Interface Only
Wireless MRBus Interface Only
ICSP Header
ATmega1284
TQFP44
U2
U1
AP63203
U3
RV-3129-C3
XB3_MMT
U5
LCD
LCD1
Qwiic
Aux Serial
MICRO SD SOCKET
J8
CR1220 SOCKET
XB1
XBee Programming Header
YELLOW (RSSI) LED
RED (ASSOC) LED
GREEN LED
AMBER LED
Notes:
1) All caps ceramic unless otherwise noted.
TITLE MRBus Fast Clock Master
FILE: mrb-fcm.sch
REVISION: $Revision: 82 $
PAGE 1 OF 1
DRAWN BY: Nathan D. Holmes