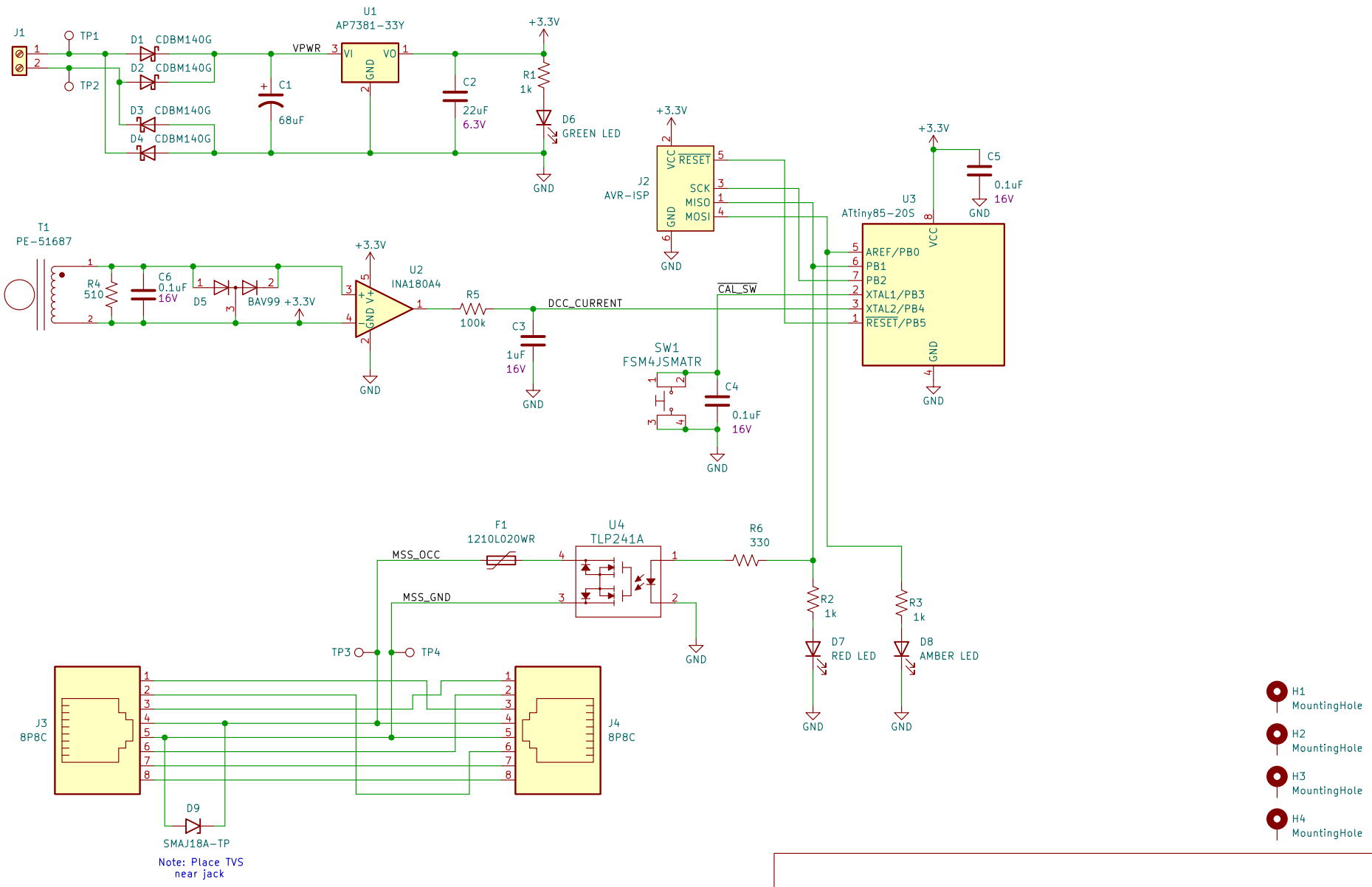

Iowa Scaled Engineering

Sheet: /

File: mss-crossover.kicad_sch

Title: MSS Crossover Block Detector

Size: USLetter	Date:	Rev:
KiCad E.D.A. eeschema 6.0.2+dfsg-1		Id: 1/1