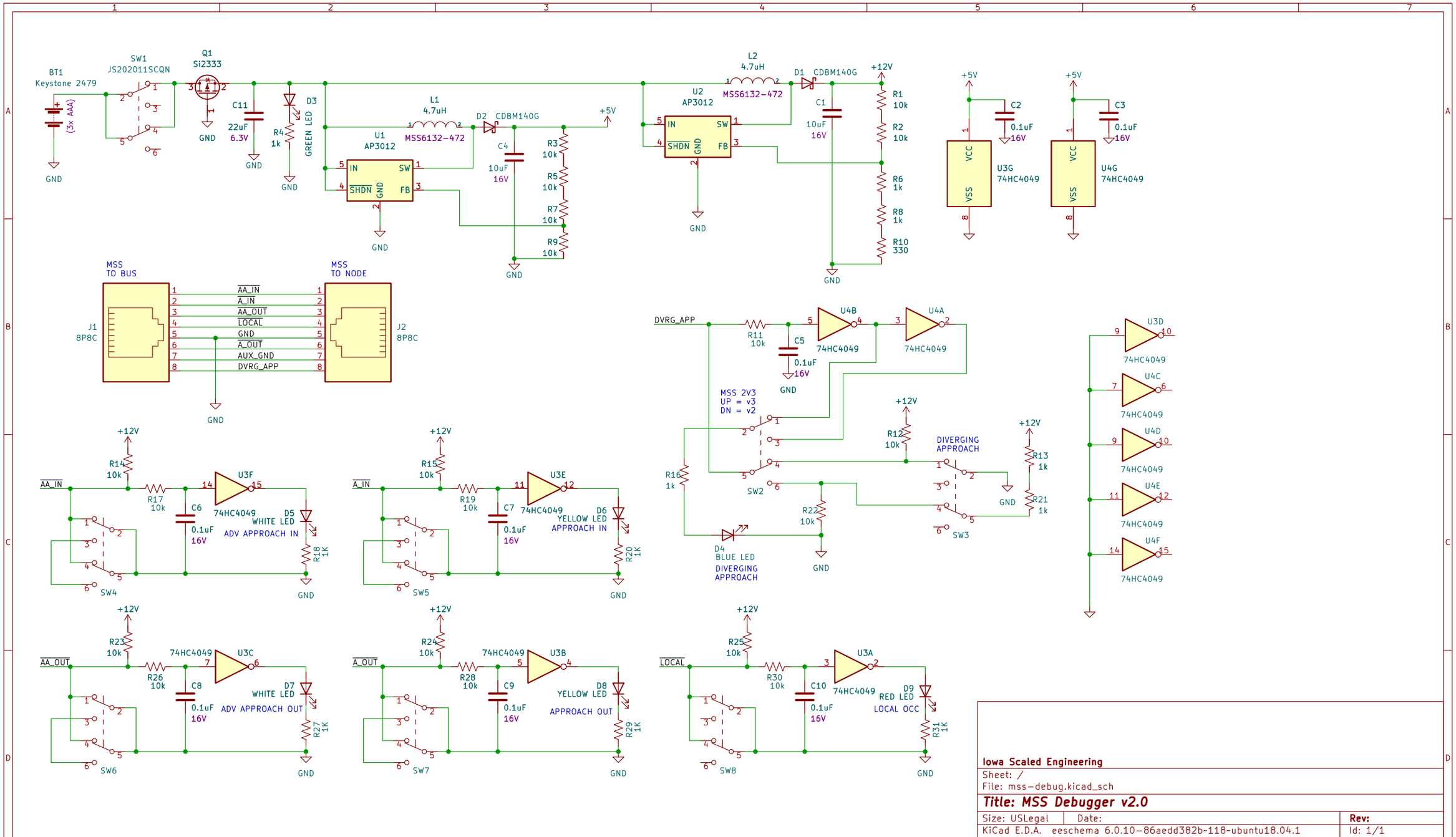

Iowa Scaled Engineering

Sheet: /

File: mss-debug.kicad_sch

Title: MSS Debugger v2.0

Size: USLegal	Date:	Rev:
KiCad E.D.A. eeschema 6.0.10-86aedd382b-118-ubuntu18.04.1		Id: 1/1