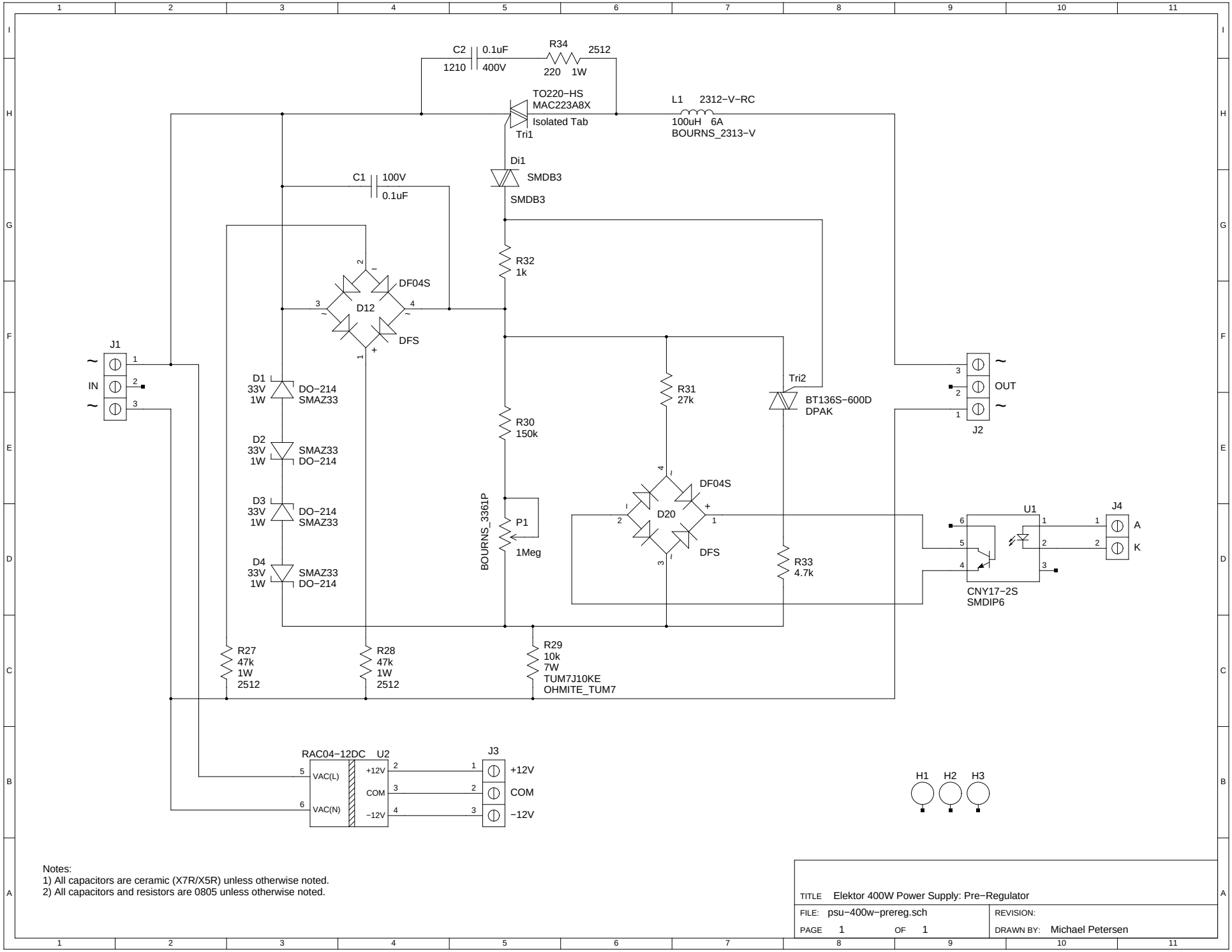

Notes:
1) All capacitors are ceramic (X7R/X5R) unless otherwise noted.
2) All capacitors and resistors are 0805 unless otherwise noted.

TITLE	Elektor 400W Power Supply: Pre−Regulator
FILE: psu−400w−prereg.sch	REVISION:
PAGE 1 OF 1	DRAWN BY: Michael Petersen