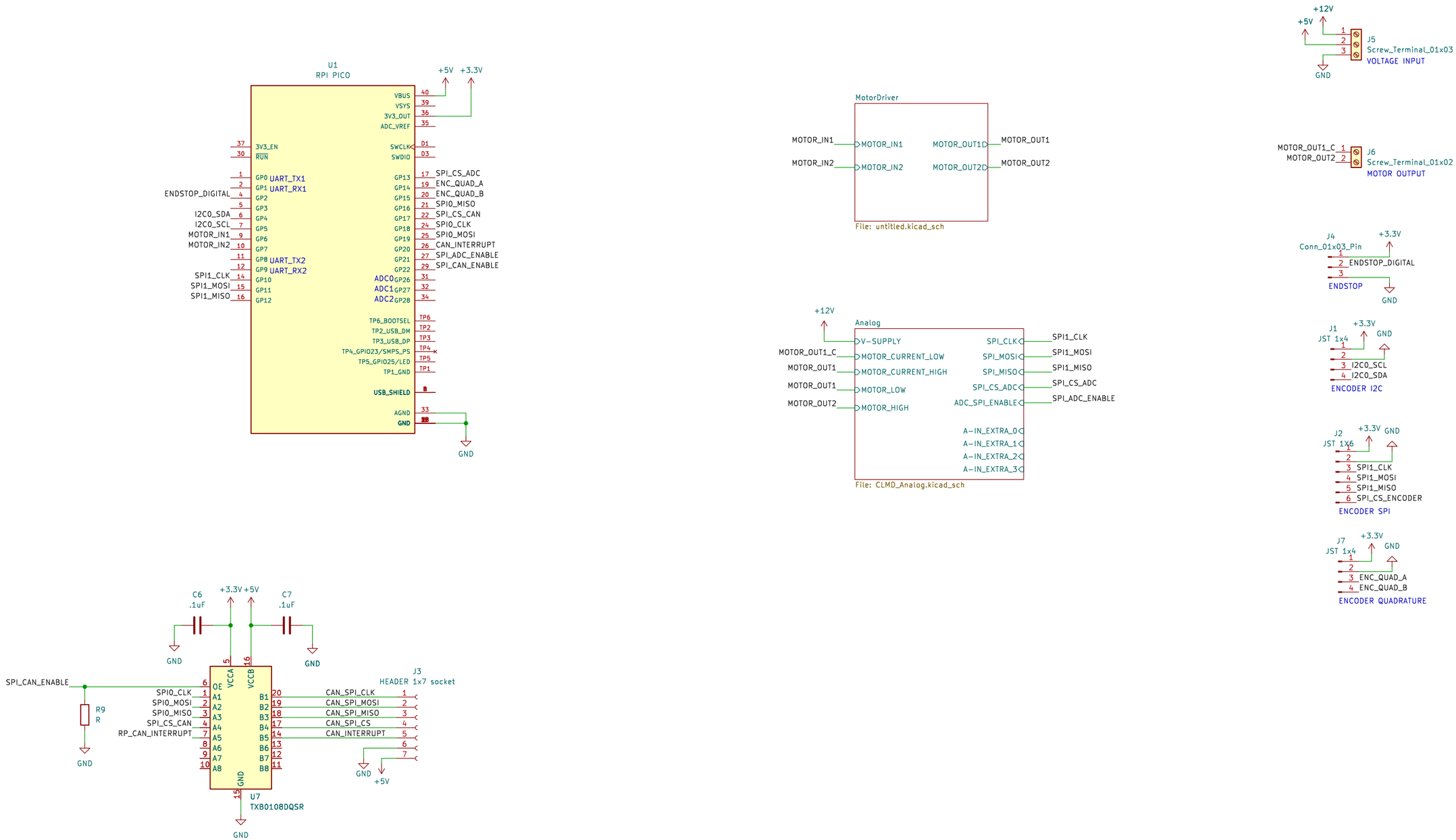

Sheet: /
File: Closed Loop Motor Driver.kicad_sch

Title:

Size: B	Date:	Rev:
KiCad E.D.A. kicad 7.0.7		Id: 1/3

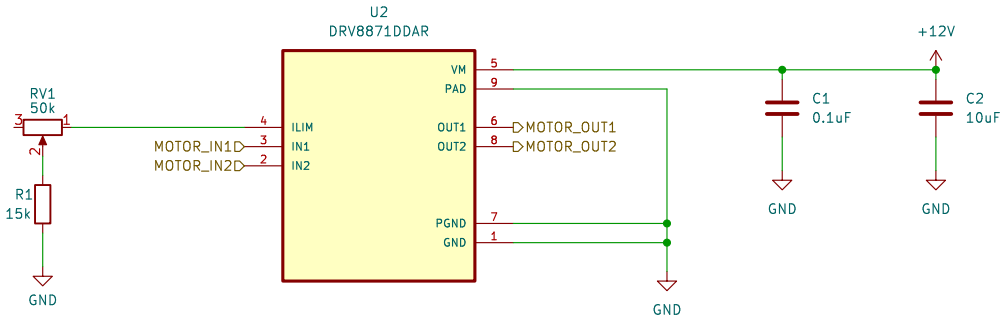

Sheet: /MotorDriver/
File: untitled.kicad_sch

Title:

Size: A4	Date:	Rev:
KiCad E.D.A. kicad 7.0.7		Id: 2/3

Analog voltages on this sheet expected to be within 0-4V

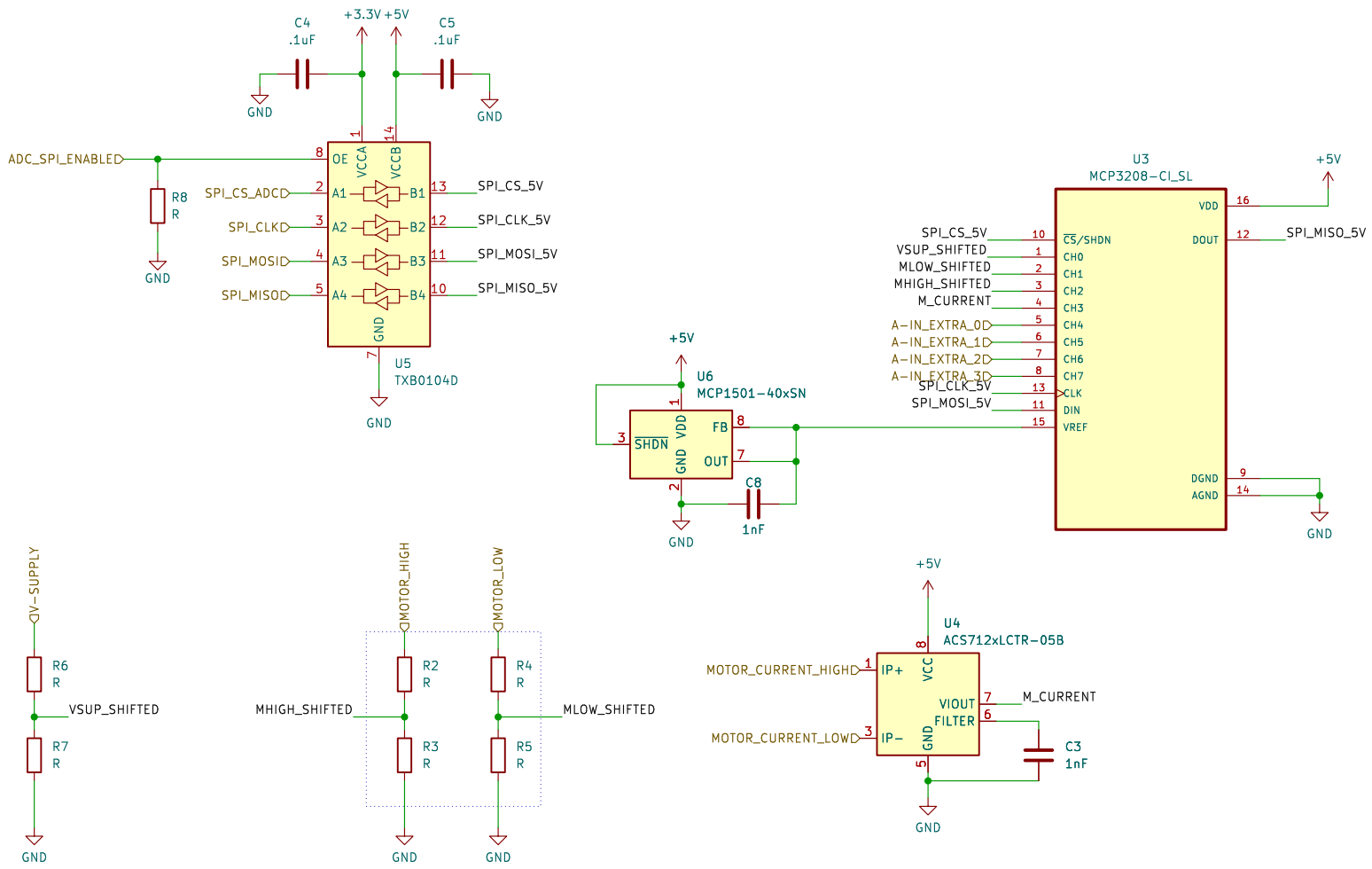

Sheet: /Analog/
File: CLMD_Analog.kicad_sch

Title:

Size: A4	Date:	Rev:
KiCad E.D.A. kicad 7.0.7		Id: 3/3