Power Supply

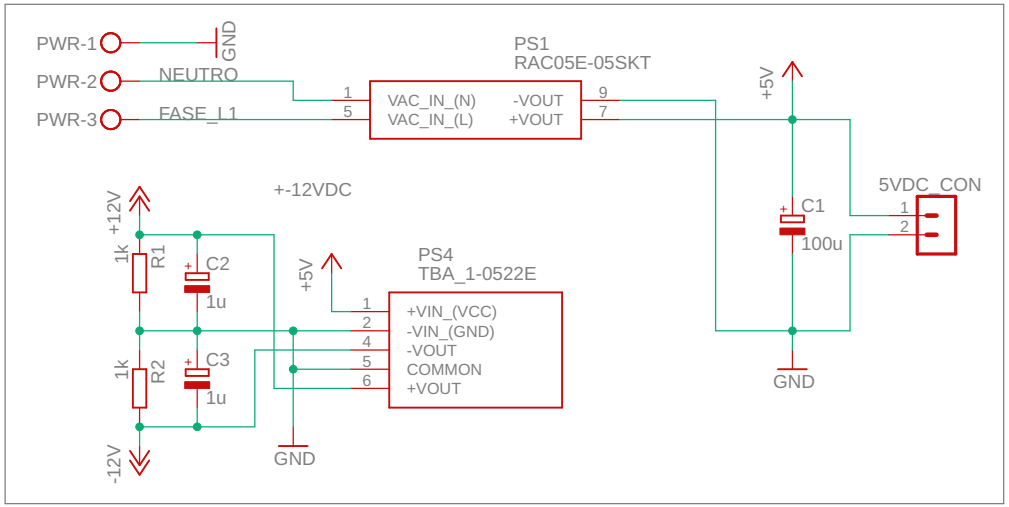

Bluetooth

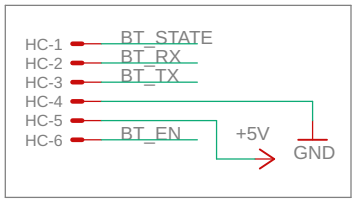

I2C

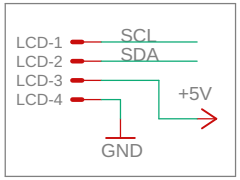

Energy Metter

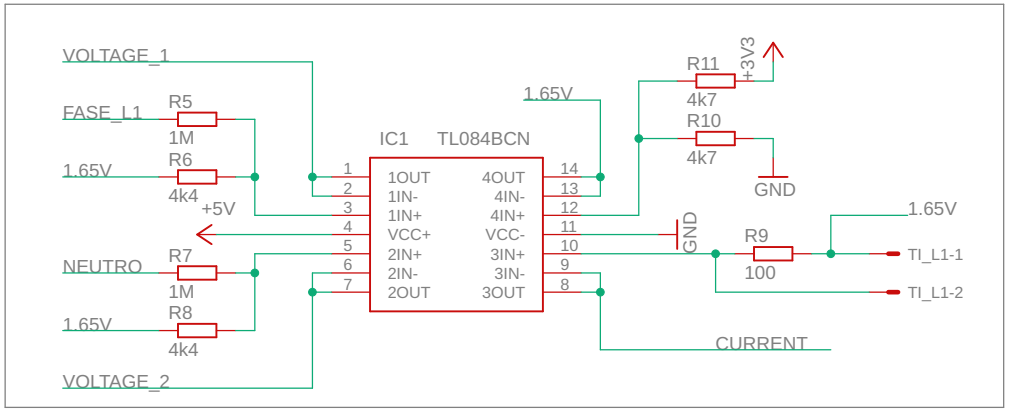
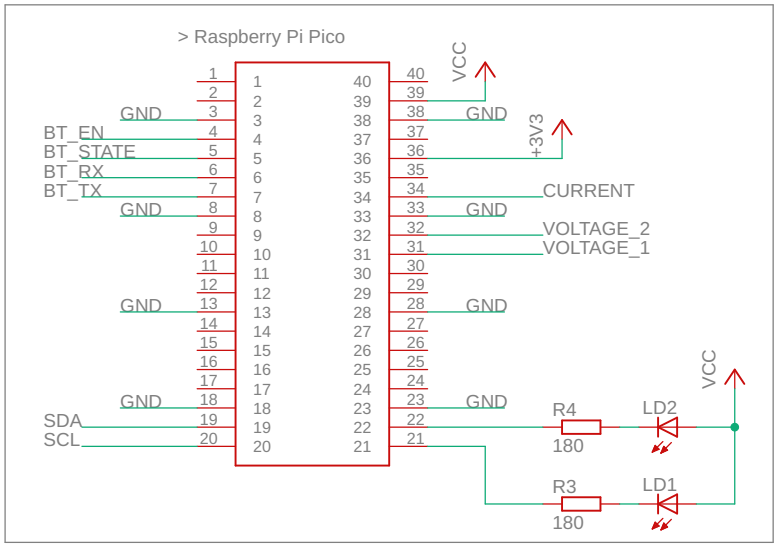
Microcontrolador