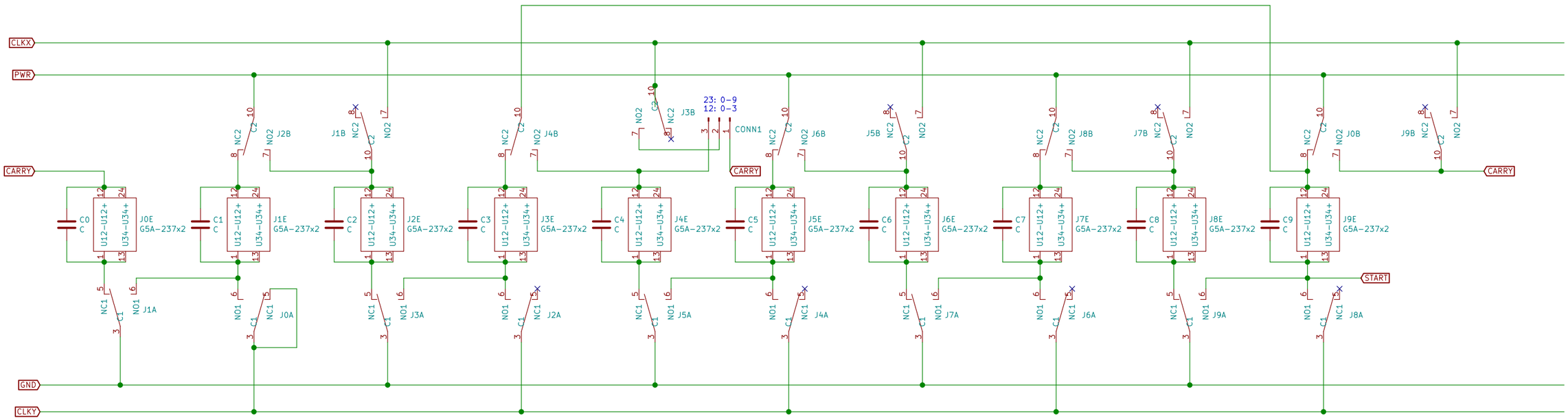

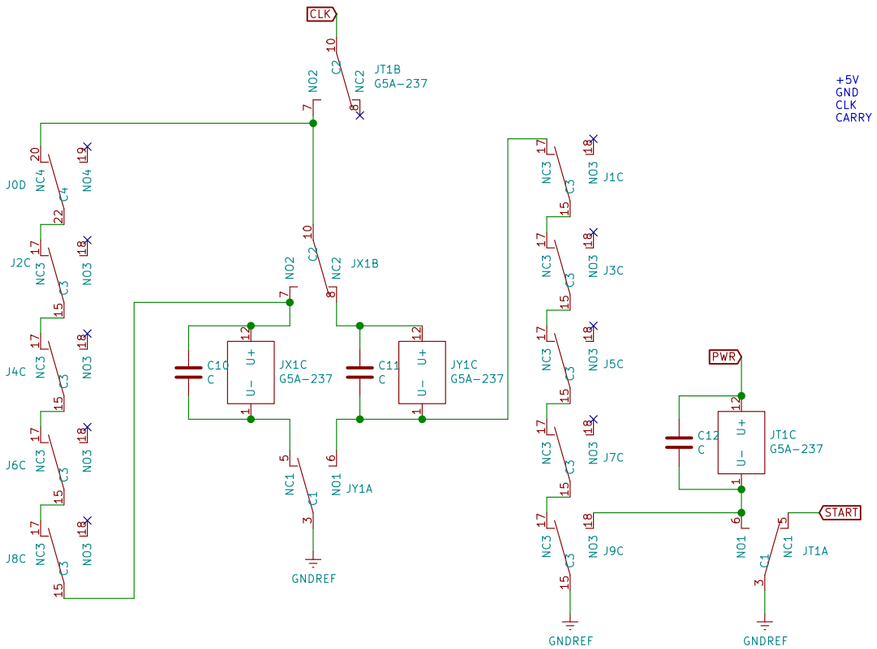

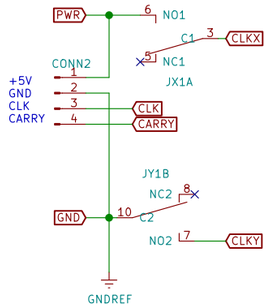

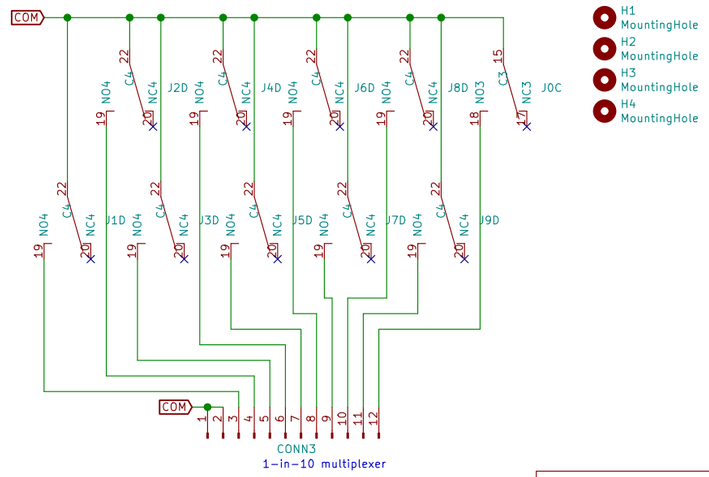

Sheet: /
File: Counter 10.sch

Title: Nixie Clock Counter 10

Size: A3	Date: 2022-11-26	Rev:
KiCad E.D.A. kicad (5.1.2)-2		Id: 1/1