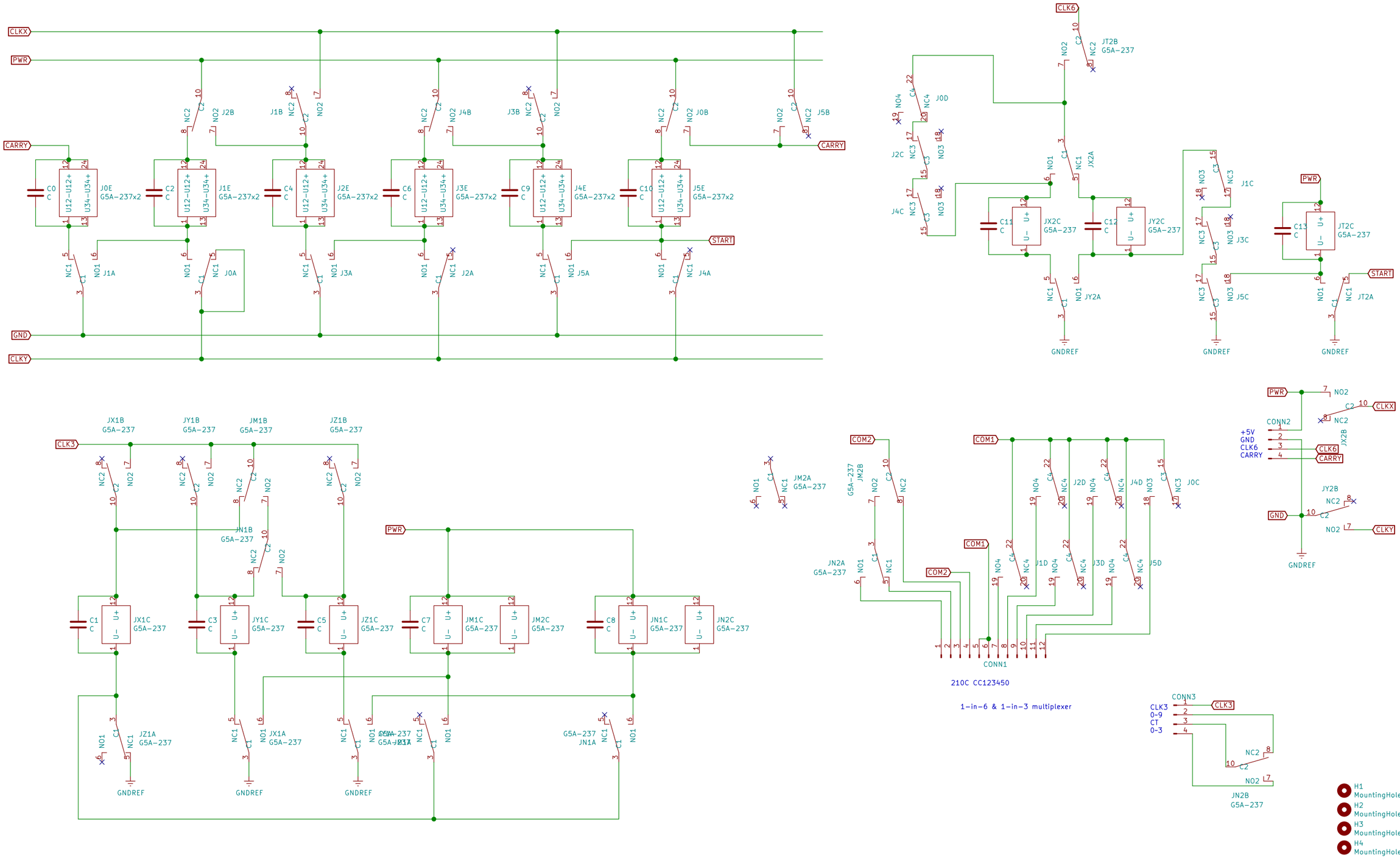

Sheet: /
File: Counter 6-3.sch

Title: Nixie Clock Counter 6-3

Size: A3	Date: 2022-11-27	Rev:
KiCad E.D.A. kicad (5.1.2)-2		Id: 1/1