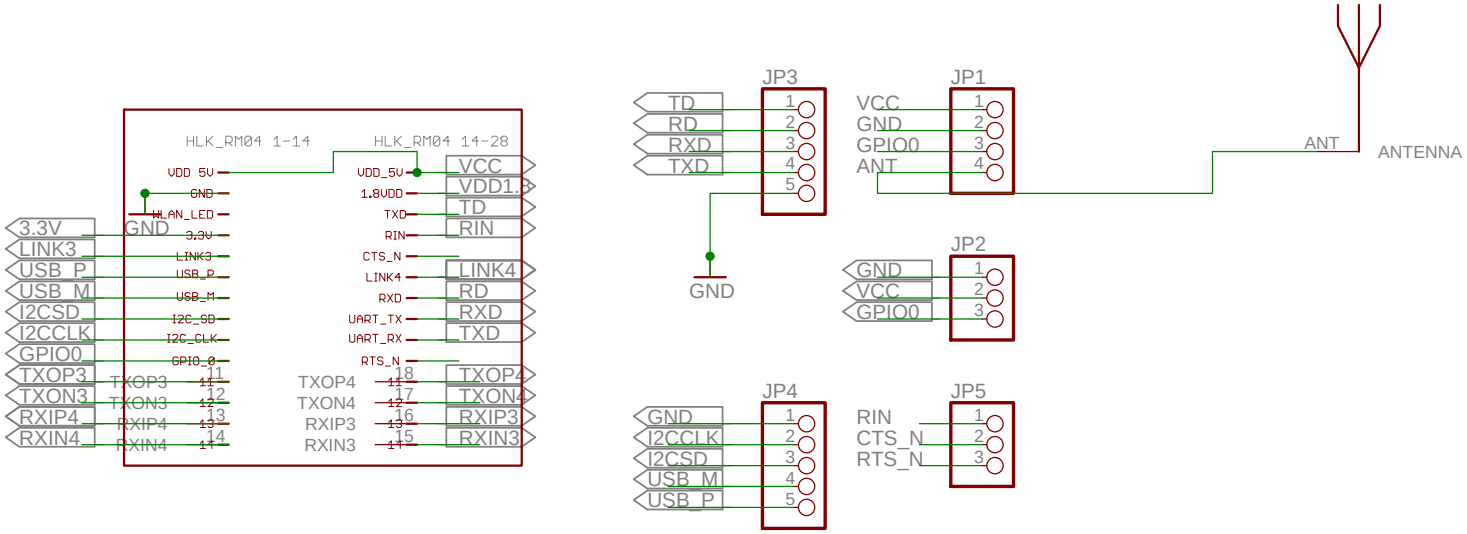

Hardware Group Ltd.

WIFI-RF433

Sheet: 1/3

Rev3

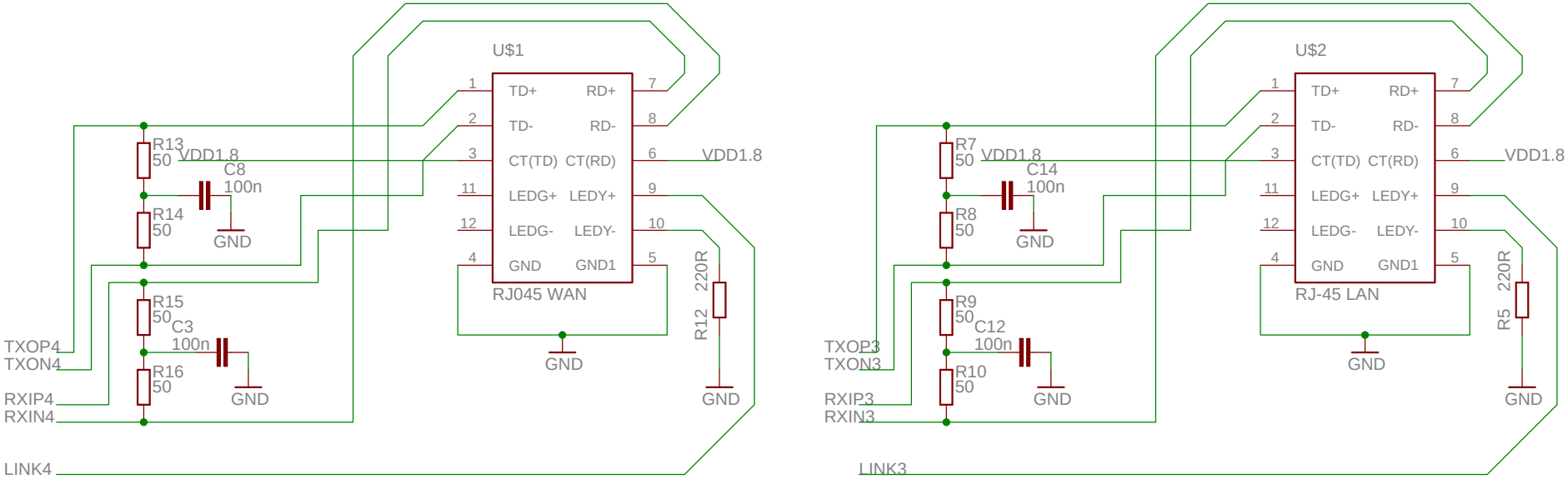

Hardware Group Ltd.

ETHERNET LAN / WAN

Sheet: 2/3

Rev3

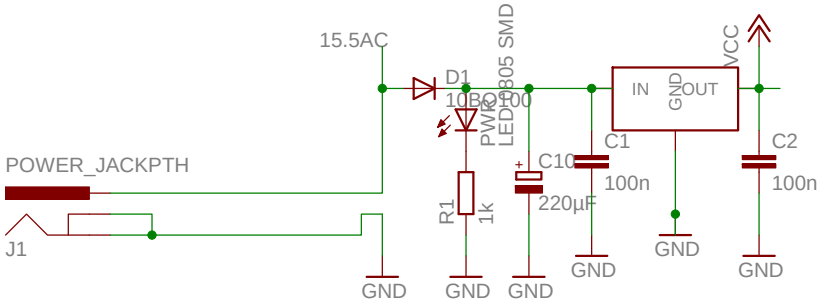

Hardware Group Ltd.

Power Supply

Sheet: 3/3

Rev3