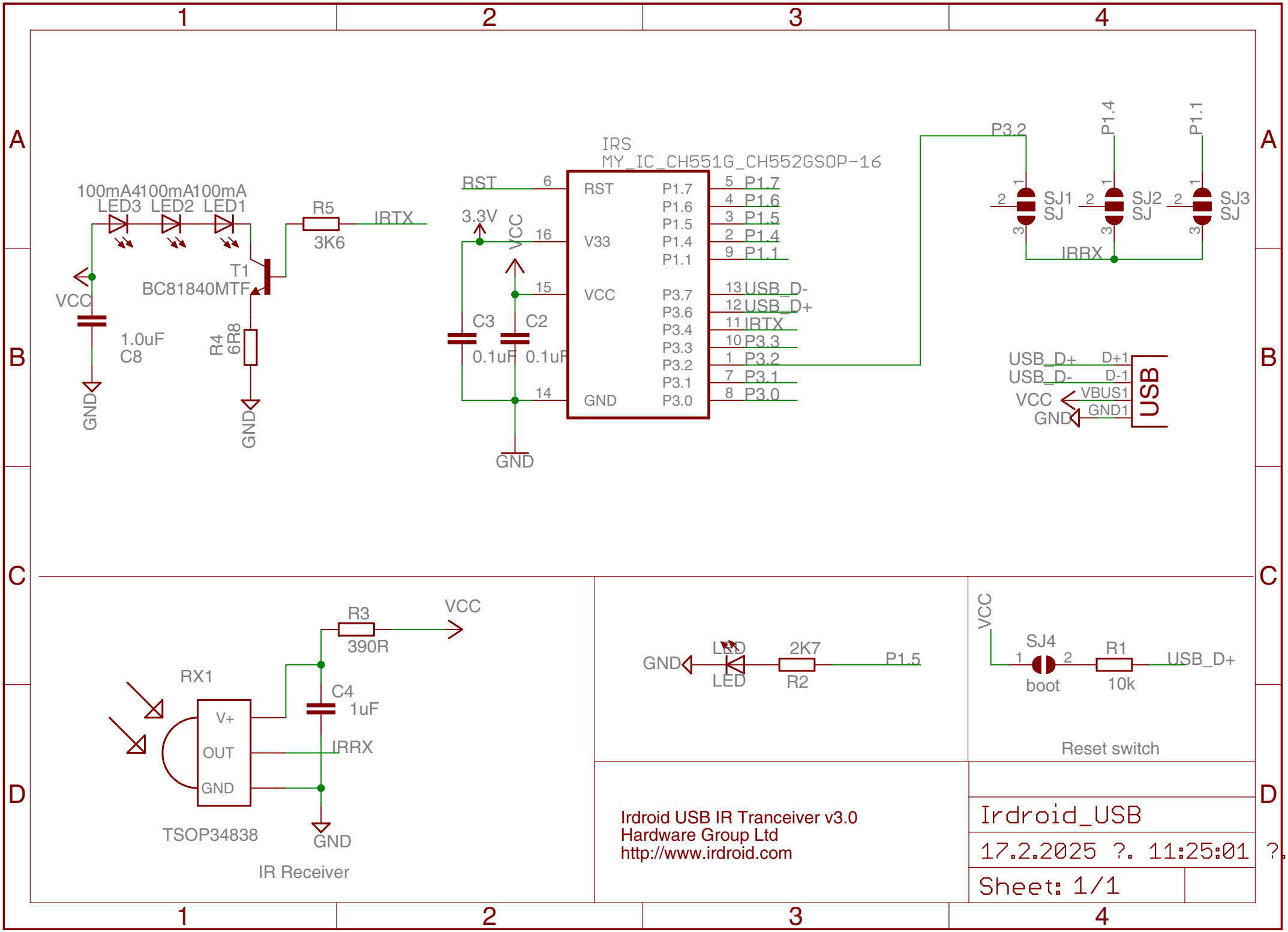
100mA4100mA100mA
LED3 LED2 LED1
R5
3K6
IRTX
T1
BC81840MTF
VCC
1.0uF
C8
R4
6R8
GND
GND
IRS
MY_IC_CH551G_CH552GSOP-16
RST
6
3.3V
VCC
16
15
14
C3
C2
0.1uF
0.1uF
GND
RST
V33
VCC
GND
P1.7
P1.6
P1.5
P1.4
P1.1
P3.7
P3.6
P3.4
P3.3
P3.2
P3.1
P3.0
5 P1.7
4 P1.6
3 P1.5
2 P1.4
9 P1.1
13 USB_D-
12 USB_D+
11 IRTX
10 P3.3
1 P3.2
7 P3.1
8 P3.0
P3.2
P1.4
P1.1
SJ1
SJ
SJ2
SJ
SJ3
SJ
IRRX
USB_D+
USB_D-
VCC
GND
D+1
D-1
VBUS1
GND1
USB
R3
390R
VCC
RX1
C4
1uF
V+
OUT
GND
IRRX
TSOP34838
GND
IR Receiver
GND
LED
LED
2K7
R2
P1.5
VCC
SJ4
boot
R1
10k
USB_D+
Reset switch
Irdroid USB IR Tranceiver v3.0
Hardware Group Ltd
http://www.irdroid.com
Irdroid_USB
17.2.2025 ?. 11:25:01 ?.
Sheet: 1/1