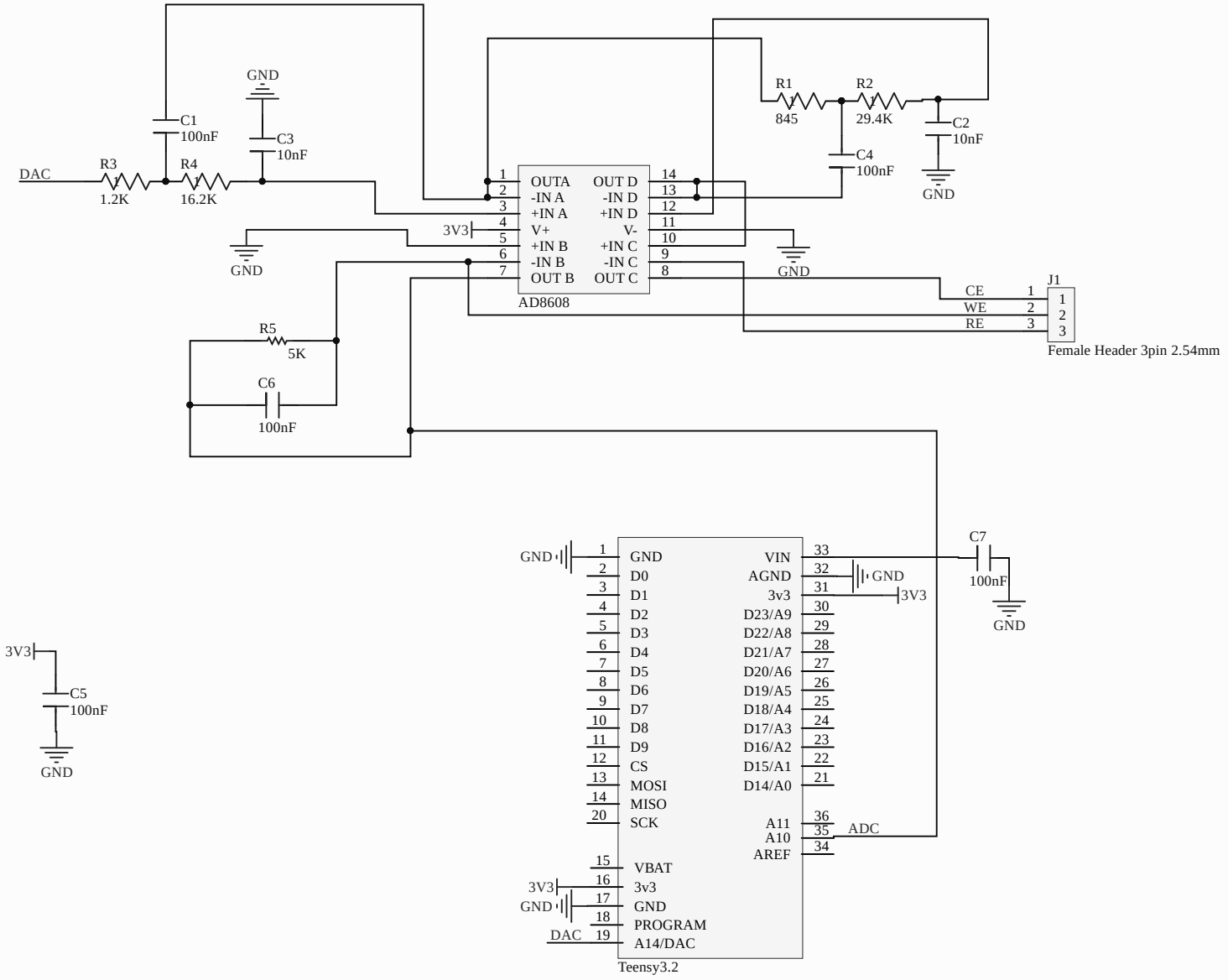

Title		
Size A4	Number	Revision
Date: 09/10/2019	Sheet of	
File: C:\Irene\..\Potenciostato2.SchDoc	Drawn By:	