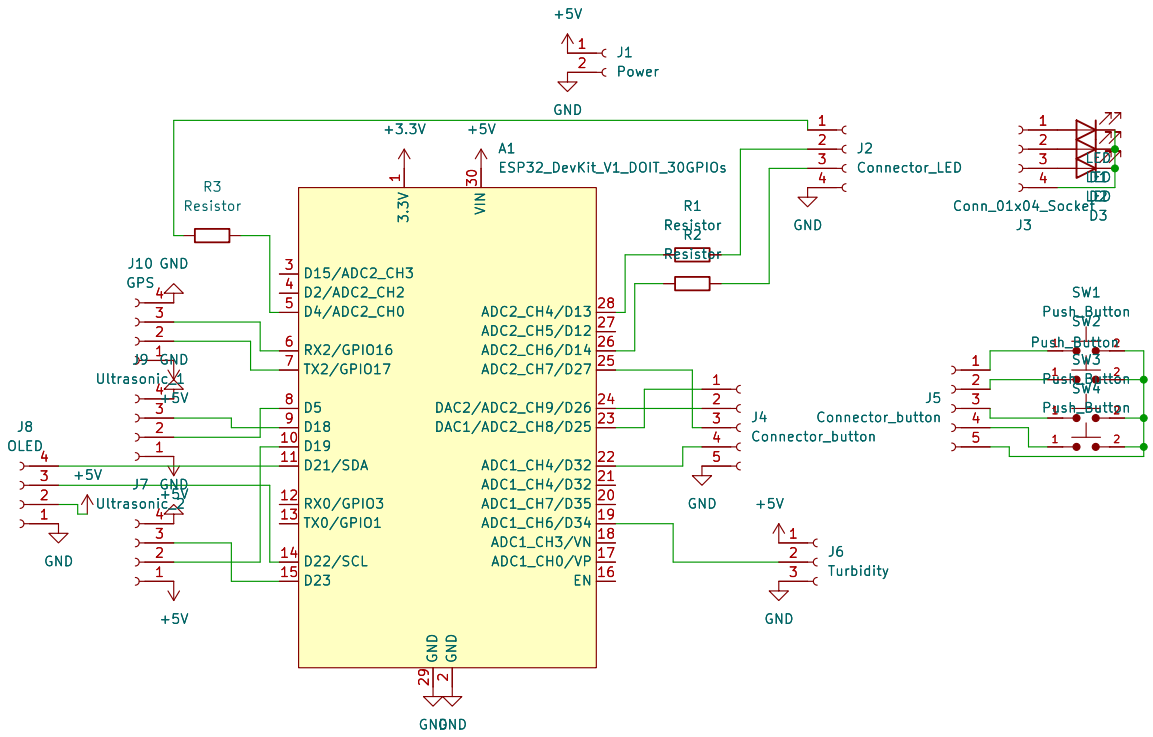

https://github.com/IrfanFardaus/Flood-Monitoring-Dashboard-system

Sheet: /
File: fyp_flood.kicad_sch

Title:

Size: A4	Date:	**Rev:**
KiCad E.D.A. 10.0.1		Id: 1/1

J5
Connector_Button
J5
SW1
SW1
Push_Button
SW2
SW2
Push_Button
SW3
SW3
Push_Button
SW4
SW4
Push_Button
J3
Conn_01x03_Socket
J3
D1
D2
D3
LED
J2
Connector_LED
J2
Ultrasonic_1
J1
J8
J8
LED
J7
Ultrasonic_2
J7
J4
Connector_Button
J4
J6
J6
Turbidity
J1
Power
J1
R4
R4
Resistor
R2
R2
Resistor
R3
R3
Resistor
ESP32_DevKit_V1_DOIT_30GPIOs
ESP-32
J10
J10
GAS