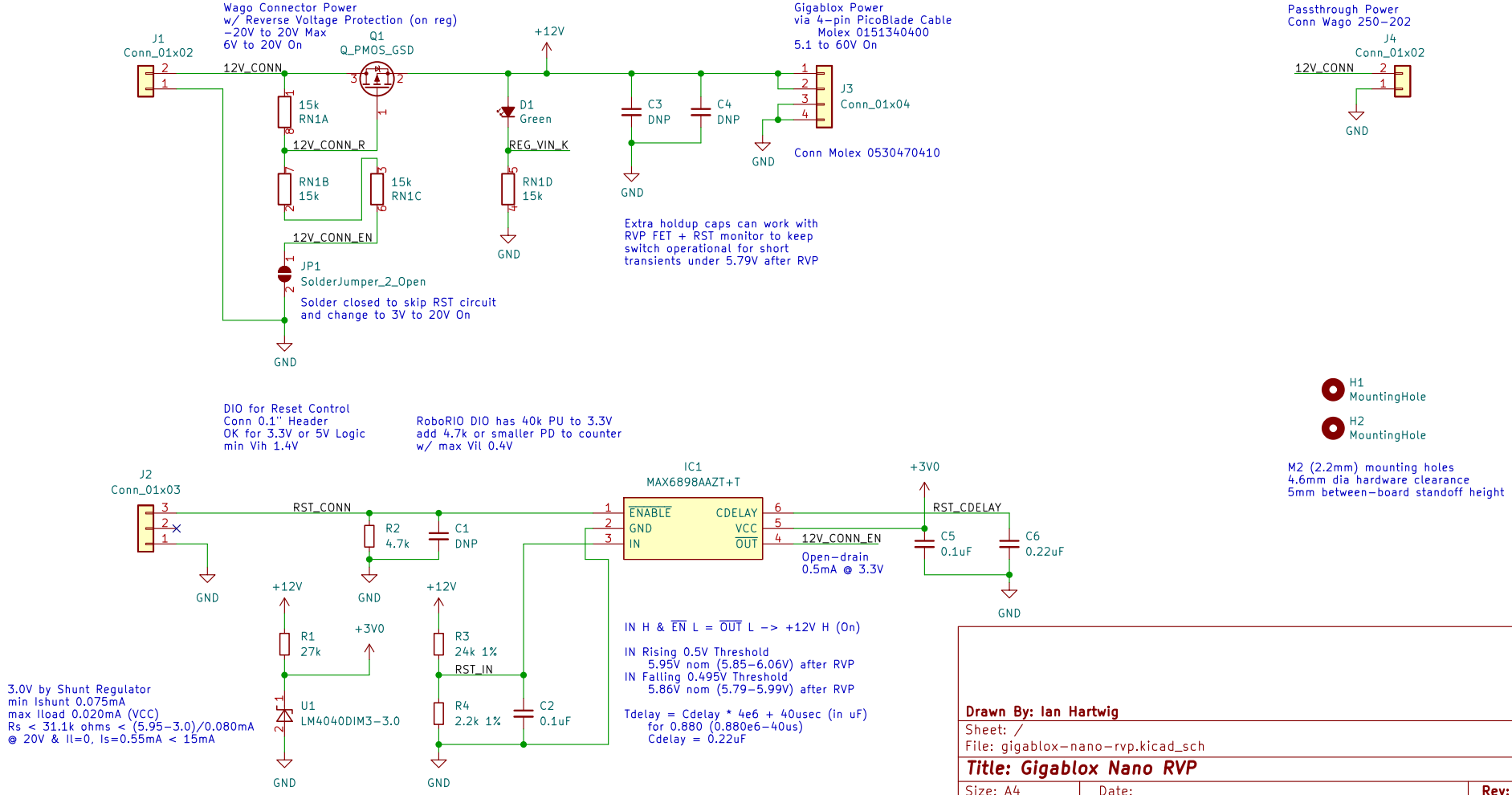


**Drawn By: Ian Hartwig**

Sheet: /

File: gigablox−nano−rvp.kicad_sch

***Title: Gigablox Nano RVP***

| | | |
|---|---|---|
| Size: A4 | Date: | **Rev: R1** |
| KiCad E.D.A. kicad (6.0.5−0) | | Id: 1/1 |