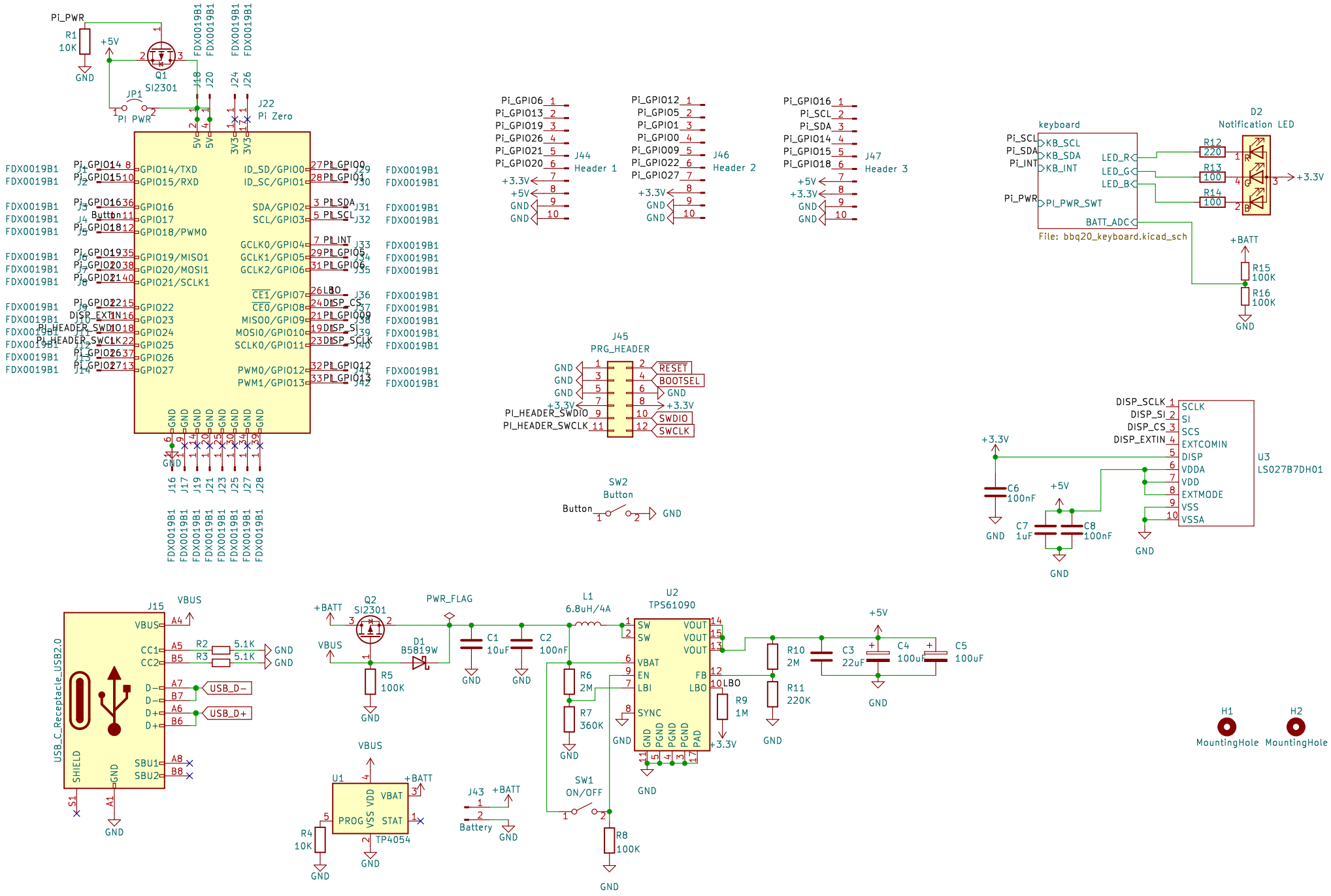
Pi_PWR
R1
10K
+5V
GND
Q1
SI2301
JP1
PI PWR
J22
Pi Zero
GPIO14/TXD
GPIO15/RXD
GPIO16
GPIO17
GPIO18/PWM0
GPIO19/MISO1
GPIO20/MOSI1
GPIO21/SCLK1
GPIO22
GPIO23
GPIO24
GPIO25
GPIO26
GPIO27
ID_SD/GPIO0
ID_SC/GPIO1
SDA/GPIO2
SCL/GPIO3
GCLK0/GPIO4
GCLK1/GPIO5
GCLK2/GPIO6
CE1/GPIO7
CE0/GPIO8
MISO0/GPIO9
MOSI0/GPIO10
SCLK0/GPIO11
PWM0/GPIO12
PWM1/GPIO13
Button
DISP_EXTIN
PI_HEADER_SWDIO
PI_HEADER_SWCLK
PI_LINT
PI_GPIO0
PI_GPIO1
PI_SDA
PI_SCL
PI_GPIO6
LBO
DISP_CS
PI_GPIO9
DISP_SI
DISP_SCLK
PI_GPIO12
PI_GPIO13
J44
Header 1
Pi_GPIO6
Pi_GPIO13
Pi_GPIO19
Pi_GPIO26
Pi_GPIO21
Pi_GPIO20
J46
Header 2
Pi_GPIO12
Pi_GPIO5
Pi_GPIO1
Pi_GPIO0
Pi_GPIO9
Pi_GPIO22
Pi_GPIO27
J47
Header 3
Pi_GPIO16
Pi_SCL
Pi_SDA
Pi_GPIO14
Pi_GPIO15
Pi_GPIO18
keyboard
KB_SCL
KB_SDA
KB_INT
PI_PWR_SWT
BATT_ADC
LED_R
LED_G
LED_B
File: bbq20_keyboard.kicad_sch
D2
Notification LED
R12
220
R13
100
R14
100
+3.3V
+BATT
R15
100K
R16
100K
J45
PRG_HEADER
RESET
BOOTSEL
SWDIO
SWCLK
SW2
Button
U3
LS027B7DH01
SCLK
SI
SCS
EXTCOMIN
DISP
VDDA
VDD
EXTMODE
VSS
VSSA
C6
100nF
C7
1uF
C8
100nF
J15
USB_C_Receptacle_USB2.0
VBUS
CC1
CC2
D-
D+
SHIELD
SBU1
SBU2
R2
5.1K
R3
5.1K
USB_D-
USB_D+
Q2
SI2301
PWR_FLAG
D1
B5819W
R5
100K
C1
10uF
C2
100nF
L1
6.8uH/4A
U2
TPS61090
SW
VBAT
EN
LBI
SYNC
VOUT
FB
LBO
PGND
PAD
R6
2M
R7
360K
R9
1M
R10
2M
R11
220K
C3
22uF
C4
100uF
C5
100uF
U1
TP4054
PROG
STAT
R4
10K
J43
Battery
SW1
ON/OFF
R8
100K
H1
MountingHole
H2
MountingHole

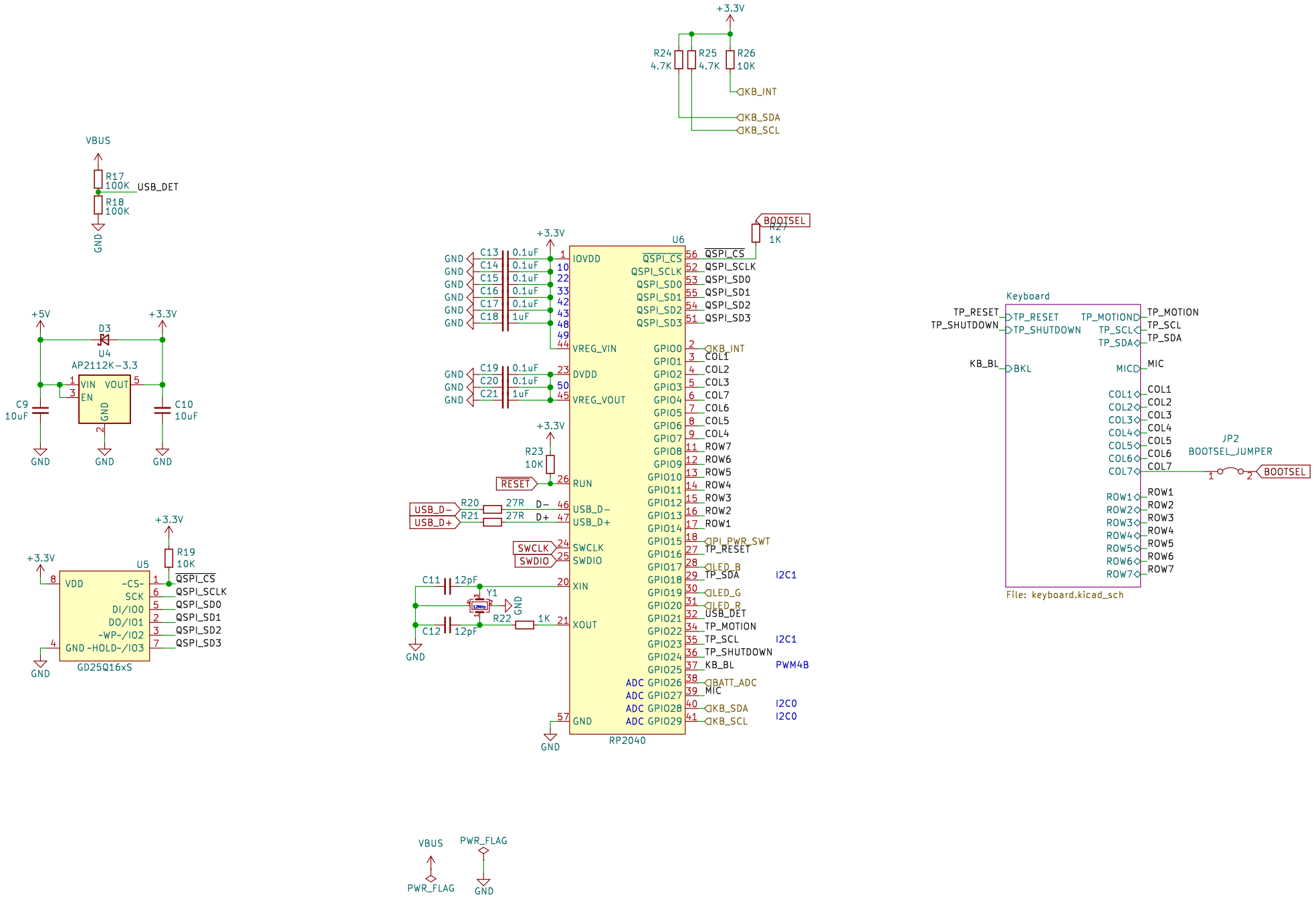
+3.3V
R24 4.7K
R25 4.7K
R26 10K
KB_INT
KB_SDA
KB_SCL
VBUS
R17 100K
USB_DET
R18 100K
GND
BOOTSEL
R27 1K
U6
+3.3V
C13 0.1uF
C14 0.1uF
C15 0.1uF
C16 0.1uF
C17 0.1uF
C18 1uF
C19 0.1uF
C20 0.1uF
C21 1uF
IOVDD
DVDD
VREG_VIN
VREG_VOUT
RUN
USB_D−
USB_D+
SWCLK
SWDIO
XIN
XOUT
GND
QSPI_CS
QSPI_SCLK
QSPI_SD0
QSPI_SD1
QSPI_SD2
QSPI_SD3
GPIO0 KB_INT
GPIO1 COL1
GPIO2 COL2
GPIO3 COL3
GPIO4 COL7
GPIO5 COL6
GPIO6 COL5
GPIO7 COL4
GPIO8 ROW7
GPIO9 ROW6
GPIO10 ROW5
GPIO11 ROW4
GPIO12 ROW3
GPIO13 ROW2
GPIO14 ROW1
GPIO15 PI_PWR_SWT
GPIO16 TP_RESET
GPIO17 LED_B
GPIO18 TP_SDA I2C1
GPIO19 LED_G
GPIO20 LED_R
GPIO21 USB_DET
GPIO22 TP_MOTION
GPIO23 TP_SCL I2C1
GPIO24 TP_SHUTDOWN
GPIO25 KB_BL PWM4B
ADC GPIO26 BATT_ADC
ADC GPIO27 MIC
ADC GPIO28 KB_SDA I2C0
ADC GPIO29 KB_SCL I2C0
RP2040
RESET
R23 10K
R20 27R D−
R21 27R D+
C11 12pF
C12 12pF
Y1 12MHz
R22 1K
+5V
+3.3V
D3
U4
AP2112K−3.3
VIN
EN
VOUT
GND
C9 10uF
C10 10uF
+3.3V
R19 10K
U5
VDD
~CS~
SCK
DI/IO0
DO/IO1
~WP~/IO2
GND ~HOLD~/IO3
GD25Q16xS
Keyboard
TP_RESET
TP_SHUTDOWN
TP_MOTION
TP_SCL
TP_SDA
KB_BL
BKL
MIC
COL1
COL2
COL3
COL4
COL5
COL6
COL7
ROW1
ROW2
ROW3
ROW4
ROW5
ROW6
ROW7
File: keyboard.kicad_sch
JP2
BOOTSEL_JUMPER
BOOTSEL
VBUS
PWR_FLAG

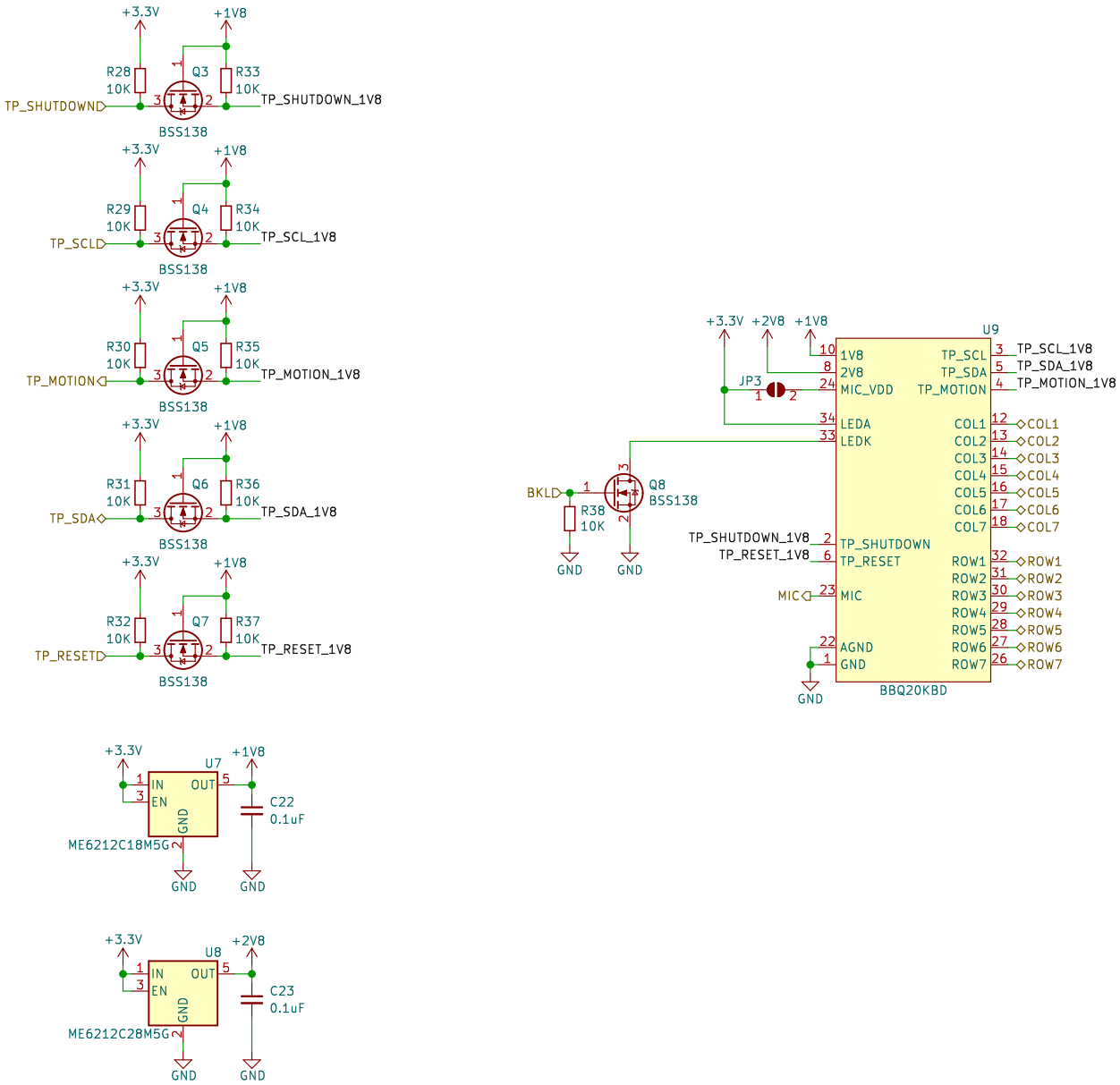
+3.3V
+1V8
R28
10K
Q3
R33
10K
TP_SHUTDOWN
TP_SHUTDOWN_1V8
BSS138
R29
10K
Q4
R34
10K
TP_SCL
TP_SCL_1V8
R30
10K
Q5
R35
10K
TP_MOTION
TP_MOTION_1V8
R31
10K
Q6
R36
10K
TP_SDA
TP_SDA_1V8
R32
10K
Q7
R37
10K
TP_RESET
TP_RESET_1V8
U7
IN
OUT
EN
GND
ME6212C18M5G
C22
0.1uF
U8
+2V8
ME6212C28M5G
C23
0.1uF
U9
1V8
2V8
MIC_VDD
LEDA
LEDK
TP_SCL
TP_SDA
TP_MOTION
COL1
COL2
COL3
COL4
COL5
COL6
COL7
TP_SHUTDOWN
TP_RESET
ROW1
ROW2
ROW3
ROW4
ROW5
ROW6
ROW7
MIC
AGND
BBQ20KBD
JP3
BKL
R38
10K
Q8
BSS138