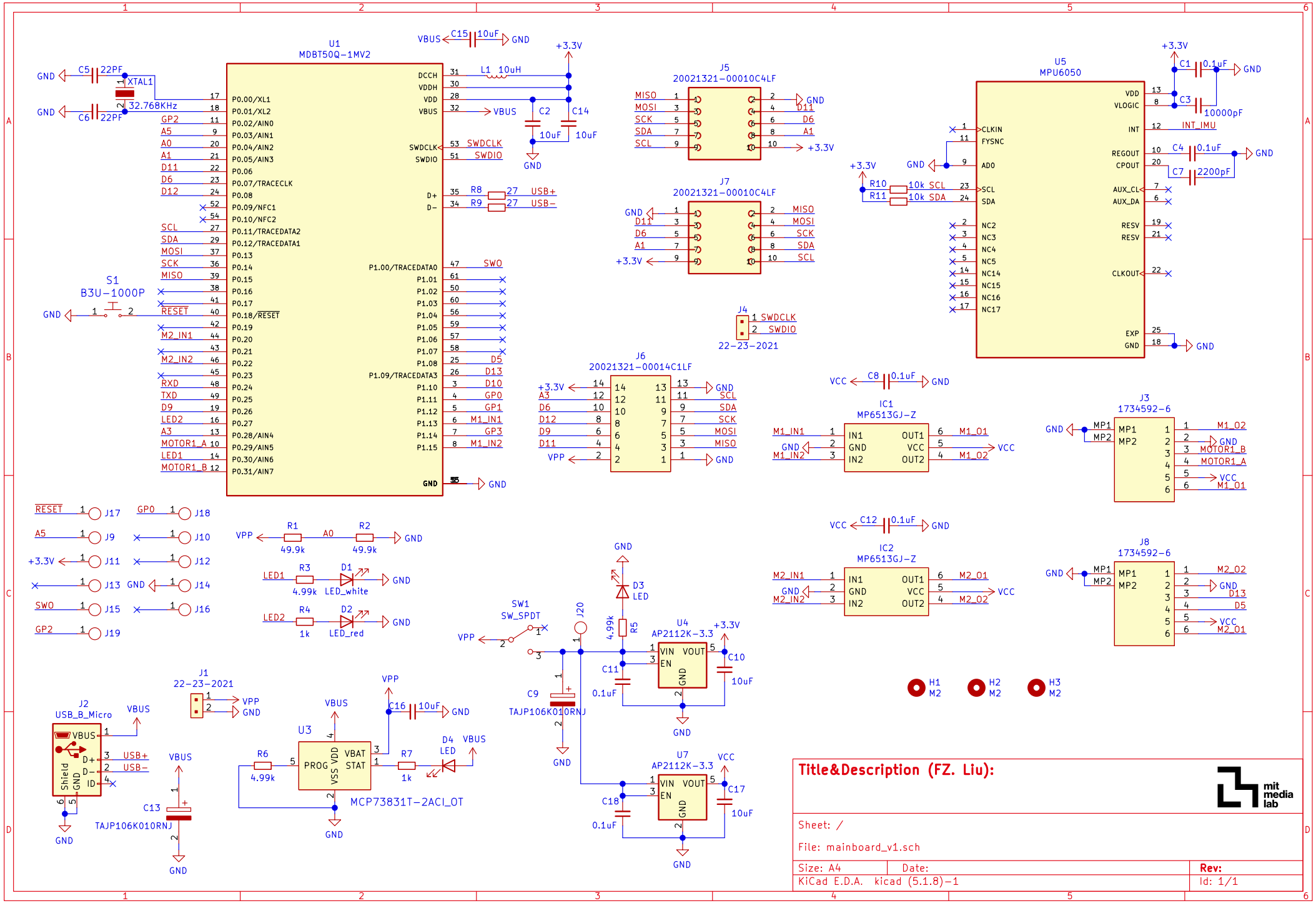
U1
MDBT50Q-1MV2
XTAL1
32.768KHz
C5 22PF
C6 22PF
C15 10uF
L1 10uH
C2 10uF
C14 10uF
R8 27 USB+
R9 27 USB-
S1
B3U-1000P
J5
20021321-00010C4LF
J7
20021321-00010C4LF
J4
22-23-2021
J6
20021321-00014C1LF
U5
MPU6050
R10 10k SCL
R11 10k SDA
C1 0.1uF
C3 10000pF
C4 0.1uF
C7 2200pF
IC1
MP6513GJ-Z
C8 0.1uF
J3
1734592-6
IC2
MP6513GJ-Z
C12 0.1uF
J8
1734592-6
J17
J18
J9
J10
J11
J12
J13
J14
J15
J16
J19
R1 49.9k
R2 49.9k
R3 4.99k
D1 LED_white
R4 1k
D2 LED_red
SW1
SW_SPDT
J20
D3 LED
R5 4.99k
U4
AP2112K-3.3
C10 10uF
C11 0.1uF
C9 TAJP106K010RNJ
U7
AP2112K-3.3
C17 10uF
C18 0.1uF
J2
USB_B_Micro
J1
22-23-2021
C13 TAJP106K010RNJ
U3
MCP73831T-2ACI_OT
R6 4.99k
R7 1k
C16 10uF
D4 LED
H1 M2
H2 M2
H3 M2
Title&Description (FZ. Liu):
Sheet: /
File: mainboard_v1.sch
Size: A4
Date:
Rev:
KiCad E.D.A. kicad (5.1.8)-1
Id: 1/1