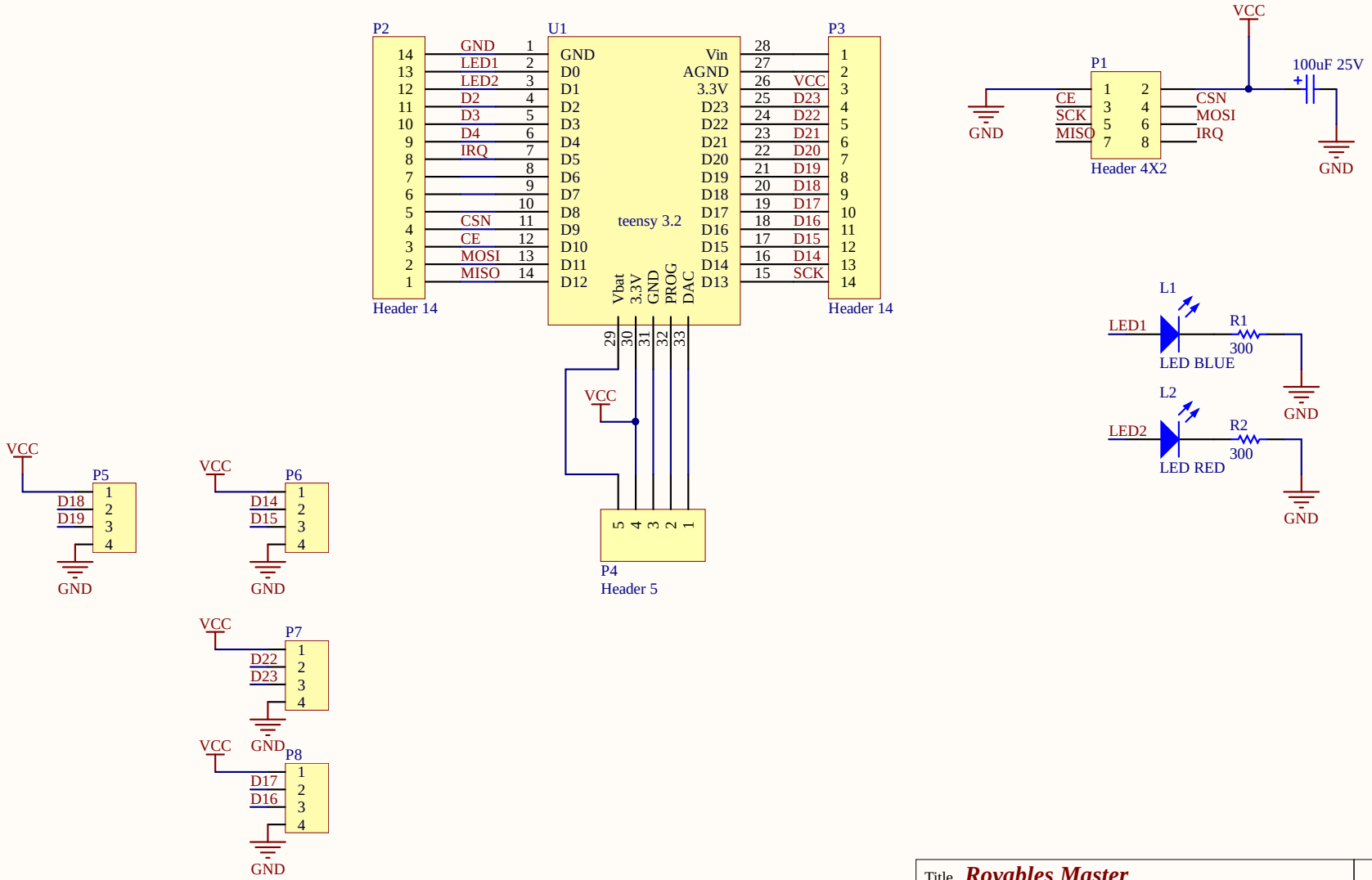

Title	***Rovables Master***		
Designed by	Artem Dementyev	Ver	1
Date: 2/2/2017	Time: 2:35:11 PM		

mit media lab