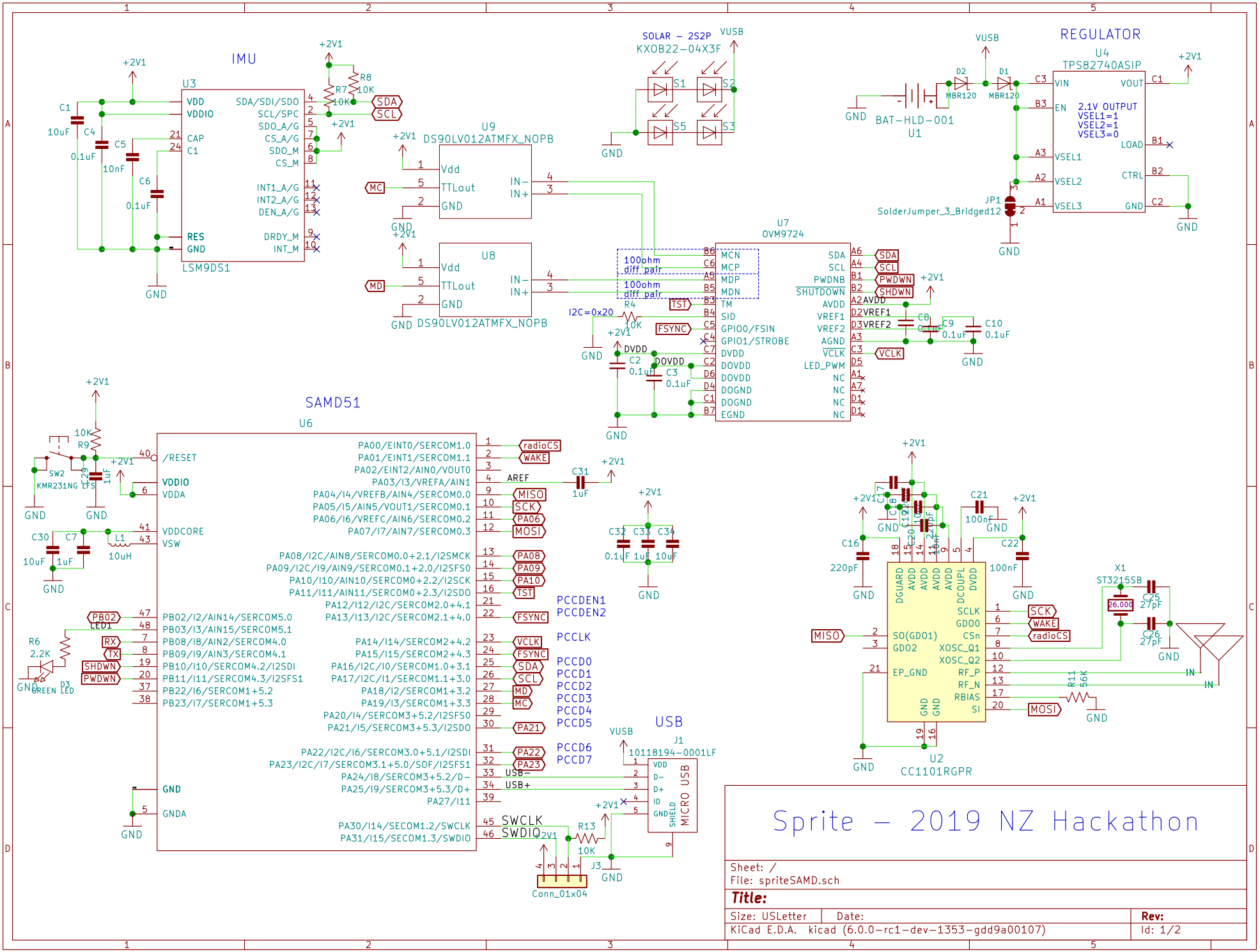

Sprite – 2019 NZ Hackathon

Sheet: /
File: spriteSAMD.sch

Title:

Size: USLetter	Date:	Rev:
KiCad E.D.A. kicad (6.0.0-rc1-dev-1353-gdd9a00107)		Id: 1/2