MULTITECH®

MultiConnect® mDot™

MTDOT Developer Guide

MultiConnect mDot Developer Guide

Models: MTDOT-915-xxx, MTDOT-868-xxx includes also the MTUDK2-ST-MDOT Developer Kit

Part Number: S000612, Version 1.6

Copyright

This publication may not be reproduced, in whole or in part, without the specific and express prior written permission signed by an executive officer of Multi-Tech Systems, Inc. All rights reserved. **Copyright © 2015 by Multi-Tech Systems, Inc.**

Multi-Tech Systems, Inc. makes no representations or warranties, whether express, implied or by estoppels, with respect to the content, information, material and recommendations herein and specifically disclaims any implied warranties of merchantability, fitness for any particular purpose and non-infringement.

Multi-Tech Systems, Inc. reserves the right to revise this publication and to make changes from time to time in the content hereof without obligation of Multi-Tech Systems, Inc. to notify any person or organization of such revisions or changes.

Trademarks and Registered Trademarks

MultiTech, and the MultiTech logo, and MultiConnect are registered trademarks and mDot and Conduit are a trademark of Multi-Tech Systems, Inc. All other products and technologies are the trademarks or registered trademarks of their respective holders.

Legal Notices

The MultiTech products are not designed, manufactured or intended for use, and should not be used, or sold or re-sold for use, in connection with applications requiring fail-safe performance or in applications where the failure of the products would reasonably be expected to result in personal injury or death, significant property damage, or serious physical or environmental damage. Examples of such use include life support machines or other life preserving medical devices or systems, air traffic control or aircraft navigation or communications systems, control equipment for nuclear facilities, or missile, nuclear, biological or chemical weapons or other military applications ("Restricted Applications"). Use of the products in such Restricted Applications is at the user's sole risk and liability.

MULTITECH DOES NOT WARRANT THAT THE TRANSMISSION OF DATA BY A PRODUCT OVER A CELLULAR COMMUNICATIONS NETWORK WILL BE UNINTERRUPTED, TIMELY, SECURE OR ERROR FREE, NOR DOES MULTITECH WARRANT ANY CONNECTION OR ACCESSIBILITY TO ANY CELLULAR COMMUNICATIONS NETWORK. MULTITECH WILL HAVE NO LIABILITY FOR ANY LOSSES, DAMAGES, OBLIGATIONS, PENALTIES, DEFICIENCIES, LIABILITIES, COSTS OR EXPENSES (INCLUDING WITHOUT LIMITATION REASONABLE ATTORNEYS FEES) RELATED TO TEMPORARY INABILITY TO ACCESS A CELLULAR COMMUNICATIONS NETWORK USING THE PRODUCTS.

The MultiTech products and the final application of the MultiTech products should be thoroughly tested to ensure the functionality of the MultiTech products as used in the final application. The designer, manufacturer and reseller has the sole responsibility of ensuring that any end user product into which the MultiTech product is integrated operates as intended and meets its requirements or the requirements of its direct or indirect customers. MultiTech has no responsibility whatsoever for the integration, configuration, testing, validation, verification, installation, upgrade, support or maintenance of such end user product, or for any liabilities, damages, costs or expenses associated therewith, except to the extent agreed upon in a signed written document. To the extent MultiTech provides any comments or suggested changes related to the application of its products, such comments or suggested changes is performed only as a courtesy and without any representation or warranty whatsoever.

Contacting MultiTech

Knowledge Base

The Knowledge Base provides immediate access to support information and resolutions for all MultiTech products. Visit http://www.multitech.com/kb.go.

Support Portal

To create an account and submit a support case directly to our technical support team, visit: https://support.multitech.com.

Support

Business Hours: M-F, 8am to 5pm CT

Country	By Email	By Phone
Europe, Middle East, Africa:	support@multitech.co.uk	+(44) 118 959 7774
U.S., Canada, all others:	support@multitech.com	(800) 972-2439 or (763) 717-5863

Warranty

To read the warranty statement for your product, visit www.multitech.com/warranty.go. For other warranty options, visit www.multitech.com/es.go.

World Headquarters

Multi-Tech Systems, Inc.

2205 Woodale Drive, Mounds View, MN 55112

Phone: (800) 328-9717 or (763) 785-3500

Fax (763) 785-9874

Contents

Chapter 1 Product Overview 6
Overview 6
Getting Started 6
Documentation Overview 7
Related Documentation 7
mbed Documentation 7
Programming the mDot Microcontroller 7
General mBed Links 8
mDot Platform 8
EUI and Networking 8
Product Build Options 9
Chapter 2 Mechanical Drawings with Pinouts 10
MTDOT-xxx-X1P-SMA 10
MTDOT-xxx-X1P-U.FL 11
MTDOT-xxx-X1-SMA 12
MTDOT-xxx-X1-UFL 13
MTDOT-xxx-M1-UFL 14
MTDOT-xxx-M1-TRC 15
Chapter 3 Specifications and Pin Information 16
MTDOT Specifications 16
Power Draw 19
Electrical Characteristics 20
Pin Information 20
SPI Flash 21
LoRa 22
mDot Pinout Design Notes 23
Serial Pinout Notes 23
Serial Settings 23
LoRa 23
Throughput Rates 23
Range 24
Chapter 4 Antennas 25
Antenna System 25
U.FL and Trace Antenna Options 25
Pulse Electronics Antenna 25
Antenna Specifications 25
OEM Integration 26

FCC & IC Information to Consumers 26
FCC Grant Notes 26
Host Labeling 26
Chapter 5 Safety Information 27
Handling Precautions 27
Radio Frequency (RF) Safety 27
Sécurité relative aux appareils à radiofréquence (RF) 27
Interference with Pacemakers and Other Medical Devices 28
Potential interference 28
Precautions for pacemaker wearers 28
Device Maintenance 28
User Responsibility 28
Chapter 6 Regulatory Information 29
EMC, Safety, and R&TTE Directive Compliance 29
47 CFR Part 15 Regulation Class B Devices 29
FCC Interference Notice 29
FCC Grant 30
FCC Part 15 30
FCC Notice 30
Industry Canada Class B Notice 30
Industry Canada 31
Chapter 7 Environmental Notices 32
Waste Electrical and Electronic Equipment Statement 32
WEEE Directive 32
Instructions for Disposal of WEEE by Users in the European Union 32
REACH Statement 33
Registration of Substances 33
Substances of Very High Concern (SVHC) 33
Restriction of the Use of Hazardous Substances (RoHS) 34
Information on HS/TS Substances According to Chinese Standards 35
Information on HS/TS Substances According to Chinese Standards (in Chinese) 36
Chapter 8 Labels 37
Approvals and Certification 37
Example Labels 37
Chapter 9 Developer Kit Overview 38
Developer Board Overview 38
Developer Board Features 38
MTUDK2-ST-MDOT Developer Kit Contents 38
MTUDK2-ST-CELL Developer Kit Contents 38

Chapter 10 Board Components 40
Developer Board 40
Developer Board Connectors 42
Board Components 42
LED Indicators 43
Chapter 11 Developer Board Installation 44
Installing an mDot on the Developer Board 44
Arduino Shield 45
mDot Arduino Pins 45
Installing an Arduino Shield with an mDot 45
RSMA to U.FL Cables 46
Connecting an Antenna through the Developer Board Connectors 46
Chapter 12 Developer Board Schematics 48
Block Diagram 48
Schematics 49
Chapter 13 Micro Developer Kit 54
Micro Developer Kit 54
Developer Kit Package Contents 54
Firmware Updates 54
Micro DK Mechanical Drawings 55
Micro Developer Board Components 56
Installing an mDot on a Micro Developer Board 56
Assembly Diagrams and Schematics 57
Assembly Diagrams 57
Schematics 58
Chapter 14 Design Considerations 63
Noise Suppression Design 63
PC Board Layout Guideline 63
Electromagnetic Interference 63
Electrostatic Discharge Control 64
USB Design 64
Chapter 15 AT Commands 65
MultiTech AT Command Set 65
General Commands 65
Network/Addressing Commands 65
Radio Configuration 66
Send/Receive 67
Sleep/Serial Data Mode Options 67
Index 69

Chapter 1 Product Overview

Overview

The MultiConnect mDot is a programmable, long-range RF module that provides encrypted data connectivity to sensors, industrial equipment, and remote appliances. By using LoRa™ Long Range Spread Spectrum technology, bi-directional data communication can be maintained for distances up to 5 miles/8 km line of sight, deep into buildings, or within noisy environments* using the unlicensed ISM bands in North America, Europe and worldwide. mDot simplifies local connectivity for Internet of Things (IoT) applications.

The mDot features an integrated ARM® Cortex®-M4 processor and mbed™ compatible software library for developers to control, monitor and bring edge intelligence to their Internet of Things (IoT) applications.

*Actual distance depends on conditions, configuration, antennas, desired throughput, and usage frequency. In dense urban environments, a typical range is 1-2 miles.

Getting Started

Getting started depends on what you want to do. By default, mDot ships with firmware that supports AT Commands that use the serial I/O. Refer to *Chapter 14, AT Commands.*

To send commands to the mDot:

1. Mount the mDot on the developer board. For details, refer to *Chapter 11, Developer Board Installation.*
2. Connect a serial cable into the DB-9 connector.

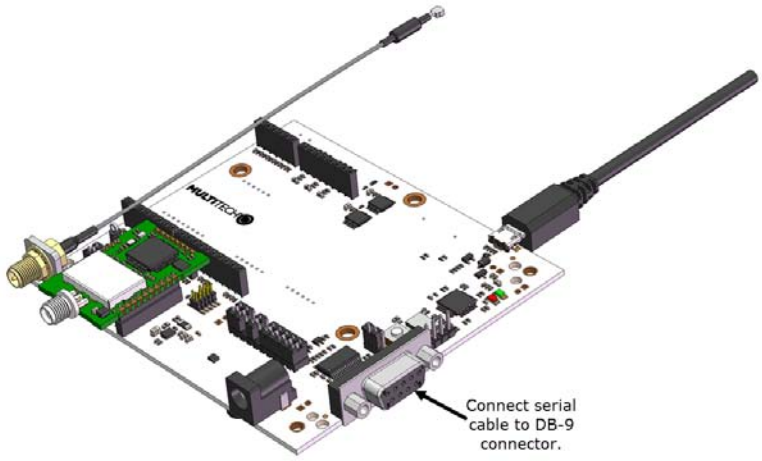

3. Open communications software, such as HyperTerminal or TeraTerm.
4. Set the following:
   - Baud rate = 115,200
   - Data bits = 8
   - Parity = N
   - Stop bits = 1
   - Flow control = Off

Two serial interfaces are available through the USB interface, one is used to program the mDot and the other is for debug messages. Refer to "mDot Pinout Design Notes" in *Chapter 3, Specifications and Pin Information* for information on which pins are available out of the box.

To develop using mbed, the mDot mbed page includes libraries and test cases. Refer to "mBed Documentation" for details and links.

For help setting up a MultiConnect® Conduit™ to send data to and from an mDot, refer to "Related Documentation."

Documentation Overview

This manual is one part of mDot documentation. Refer to the *Related Documentation* and *mbed* sections for additional information needed to program your mDot and integrate your application with the MultiConnect Conduit gateway.

This document includes the following sections:

- **mDot device information:** Mechanical drawings, specifications, safety and regulatory information, and other device specific content. Chapters 1-8
- **Universal Developer Kit information:** Using the MTUDK-ST-MDOT Developer Kit, including design considerations, schematics, and installation and operation information. Chapters 9-13
- **AT commands:** Includes MultiTech AT Commands. Chapter 14.

This manual is available at www.multitech.com/support.

Related Documentation

Application notes, LoRa information, and documentation for related products such as the MultiConnect Conduit (MTCDT) gateway and the LoRa accessory card (MTAC-LORA) are available on the MultiTech developer site. This site includes information on using the Conduit with mDots. Go to: www.multitech.net

For a datasheet and information on the STmicro ARM® Cortex®-M4 processor from go to: http://www.st.com/web/en/catalog/mmc/FM141/SC1169/SS1577/LN1877/PF260049

mbed Documentation

ARM mbed is a free, open-source platform and operating system for embedded devices using the ARM Coretx-M microcontrollers. The mbed website provides free software libraries, hardware designs, and online tools for rapid prototyping of products. The platform includes a standards-based C/C++ SDK, a microcontroller HDK, and supported development boards, an online compiler and online developer collaboration tools.

Note: To send and receive data, you need a LoRaWAN 1.0 gateway, such as MultTech's MultiConnect Conduit (MTCDT) with an MTAC-LORA accessory card installed.

Programming the mDot Microcontroller

With the mDot and the MTUDK2-ST-xx developer board, use the ARM mbed ecosystem to program the microcontroller. Compile in the cloud or locally, copy the resulting binary file to the mbed USB drive, and reset the mDot.

Note: To program the mDot, you need an mDot model with programming header, model MTDOT-xx-X1P-SMA.

On the mDot mbed page, MultiTech supplies source code for non-RF portions of the mDot and MTAC-LORA cards. To comply with FCC and ETSI certification, some portions of the software will be available only as binary libraries.

General mBed Links

- Explore mbed: http://developer.mbed.org/explore
- Getting Started with mbed: http://developer.mbed.org/getting-started
- mbed Handbook: http://developer.mbed.org/handbook/Homepage

mDot Platform

The mDot mbed page includes the mDot library, firmware, and test cases
https://developer.mbed.org/platforms/MTS-mDot-F411

EUI and Networking

All mDots have a factory-programmed Extended Unique Identifier (EUI). This is marked as **Node** on the mDot label.

To connect an mDot to a network, you will need to program it with the network ID for the network you are connecting to as well as the network key and application key. For information on setting up mDots as part of a LoRa network, go to: www.multitech.net

Product Build Options

Product	Description	Quanity to Order
North America		
MTDOT-915-X1-SMA	915 MHz XBee LoRa SMA	1 or 50
MTDOT-915-X1P-SMA	915 MHz XBee LoRa SMA with Programming Header	1
MTDOT-915-X1-UFL	915 MHz XBee LoRa U.FL	1 or 50
MTDOT-915-M1-UFL	915 MHz SMT LoRa U.FL	1 or 100
MTDOT-915-M1-TRC	915 MHz SMT LoRa RF Pad	1 or 100
EMEA		
MTDOT-868-X1-SMA	868 MHz XBee LoRa SMA	1 or 50
MTDOT-868-X1P-SMA	868 MHz XBee LoRa SMA with Programming Header	1
MTDOT-868-X1-UFL	868 MHz XBee LoRa U.FL	1 or 50
MTDOT-868-M1-UFL	868 MHz SMT LoRa U.FL	1 or 100
MTDOT-868-M1-TRC	868 MHz SMT LoRa RF Pad	1 or 100
Developer Kits		
MTUDK2-ST-MDOT	mDot Developer Kit	1

Note:

- The complete product code may end in .Rx. For example, MTDOT-915-M1-X1.Rx, where R is revision and x is the revision number.

Chapter 2 Mechanical Drawings with Pinouts

MTDOT-xxx-X1P-SMA

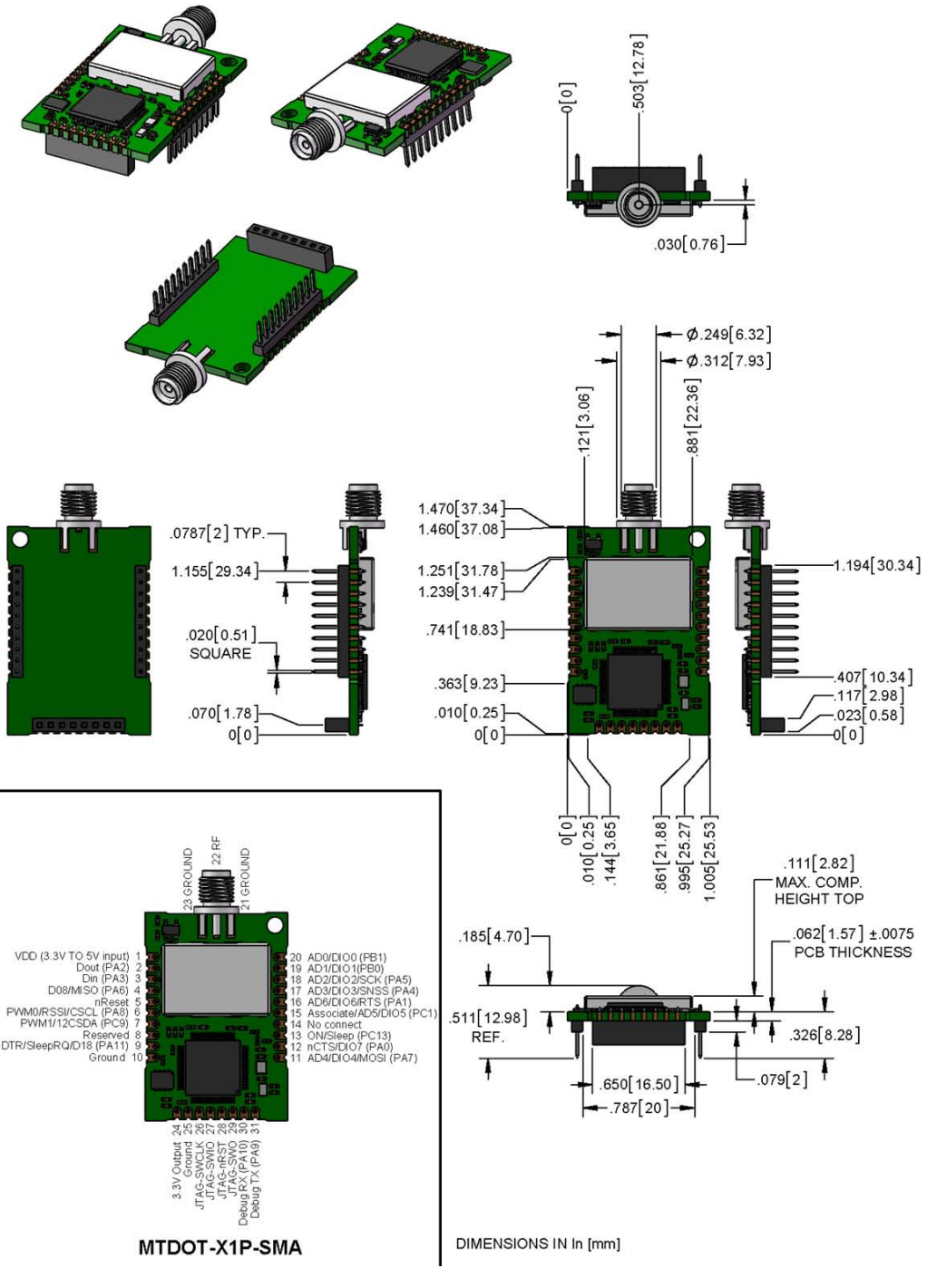

MTDOT-xxx-X1P-U.FL

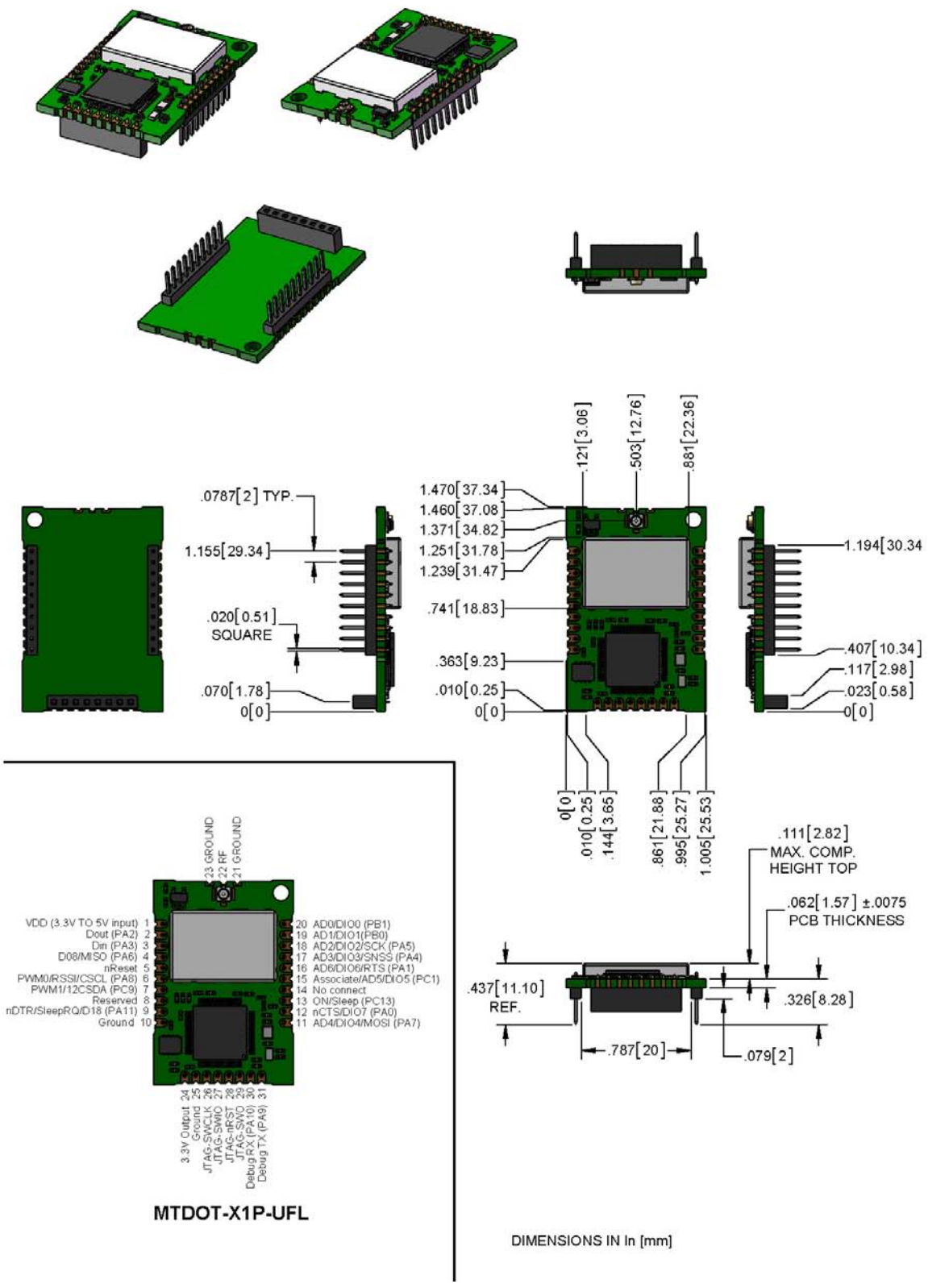

MTDOT-xxx-X1-SMA

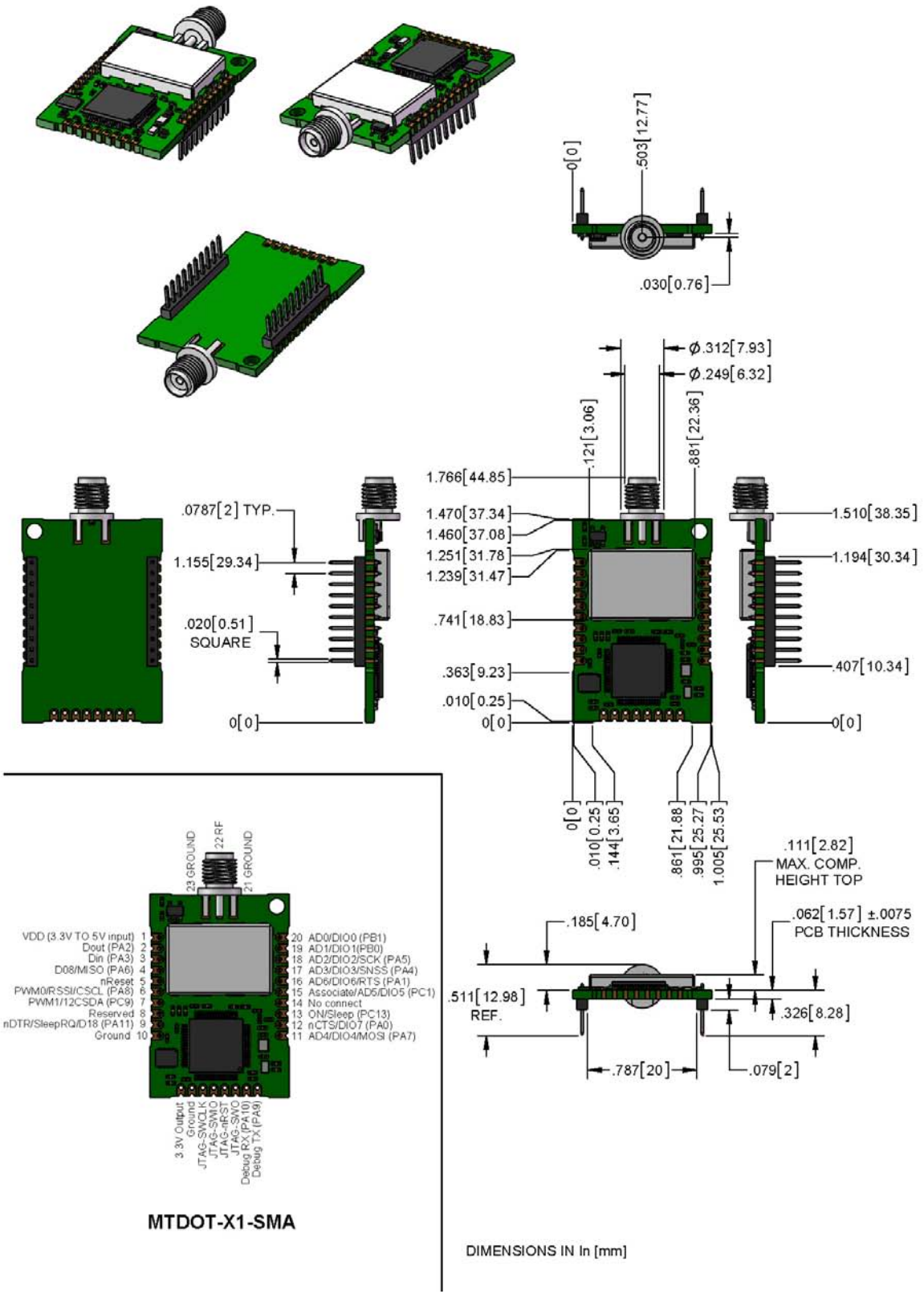

MTDOT-xxx-X1-UFL

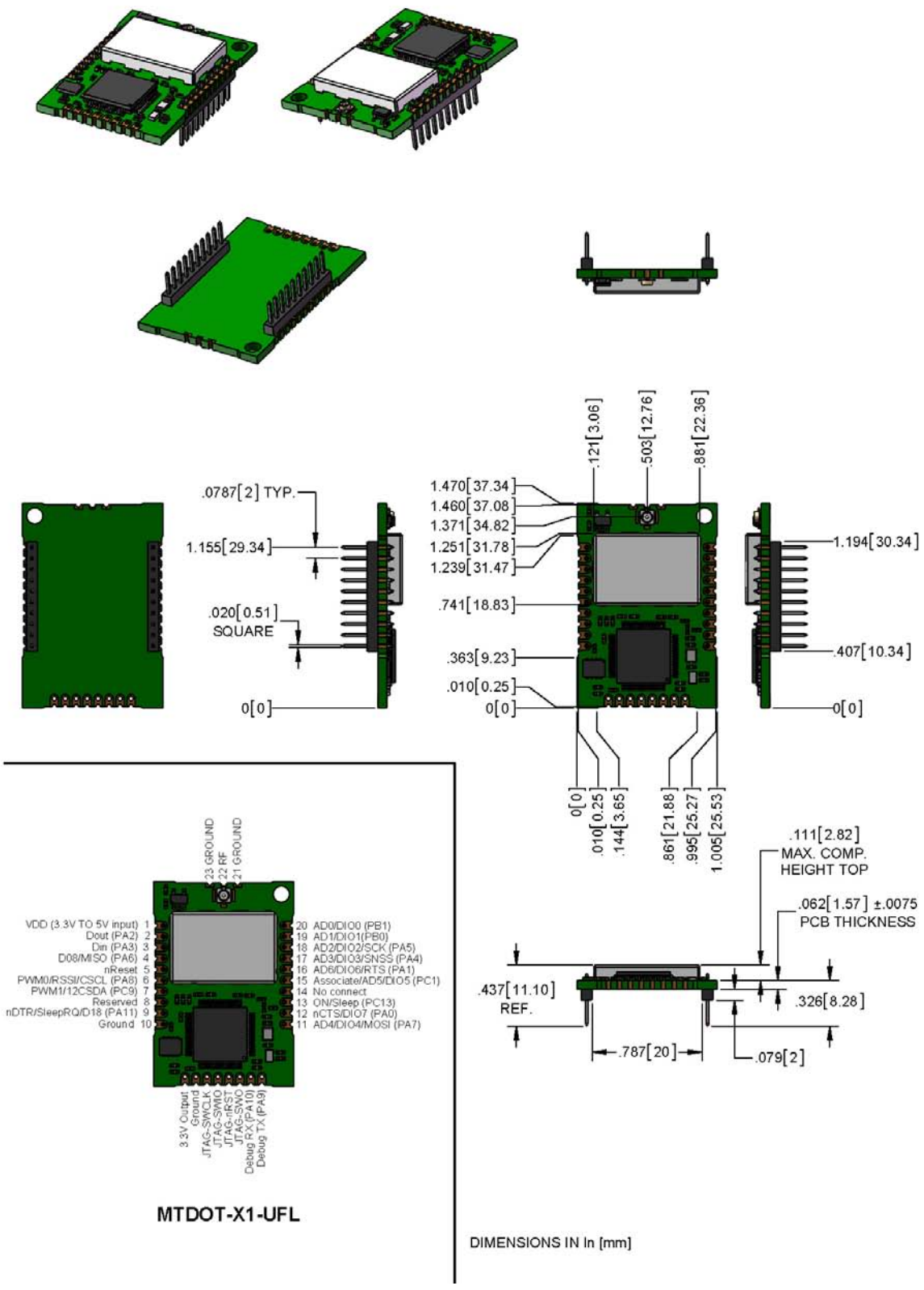

MTDOT-xxx-M1-UFL

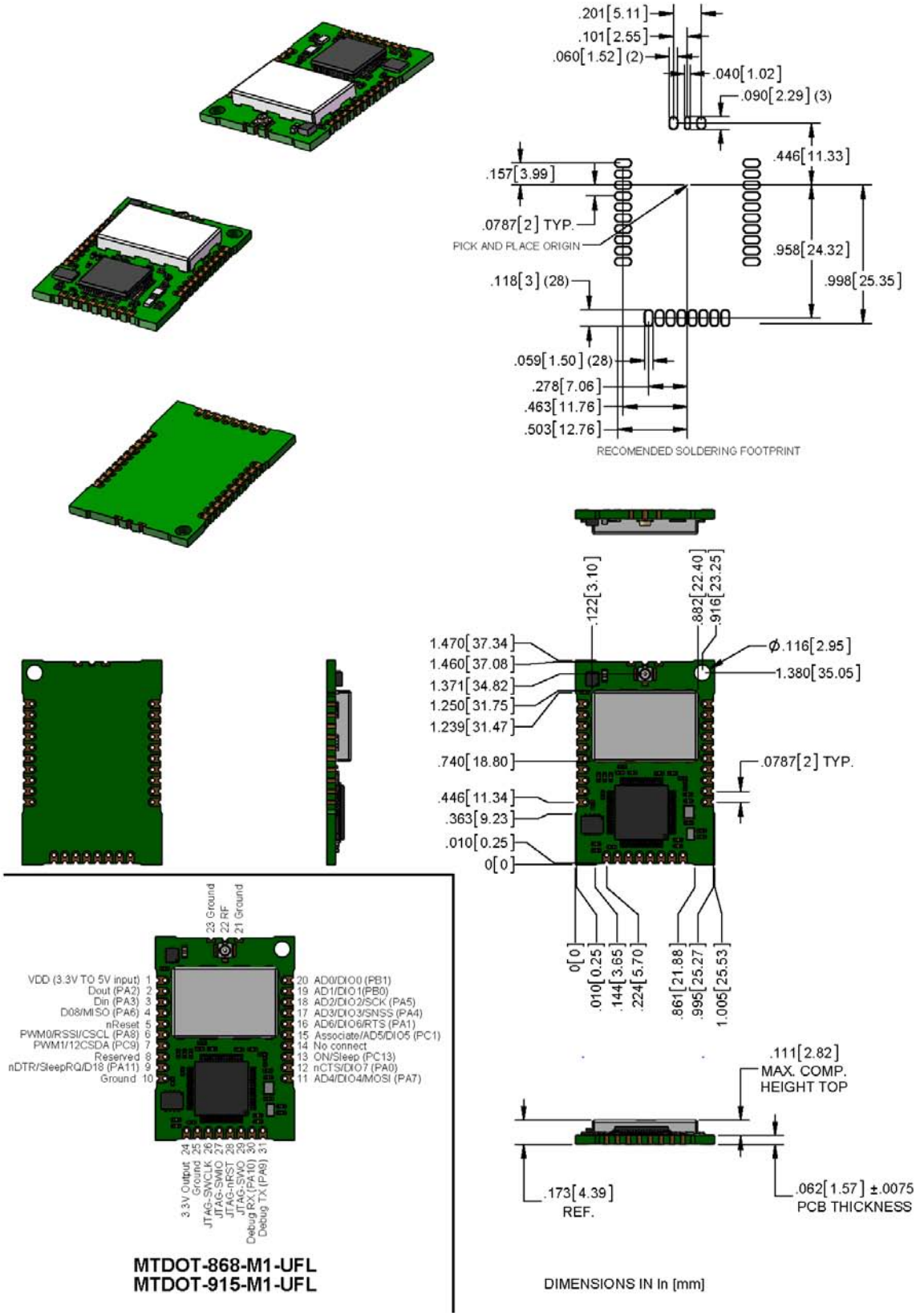

MTDOT-xxx-M1-TRC

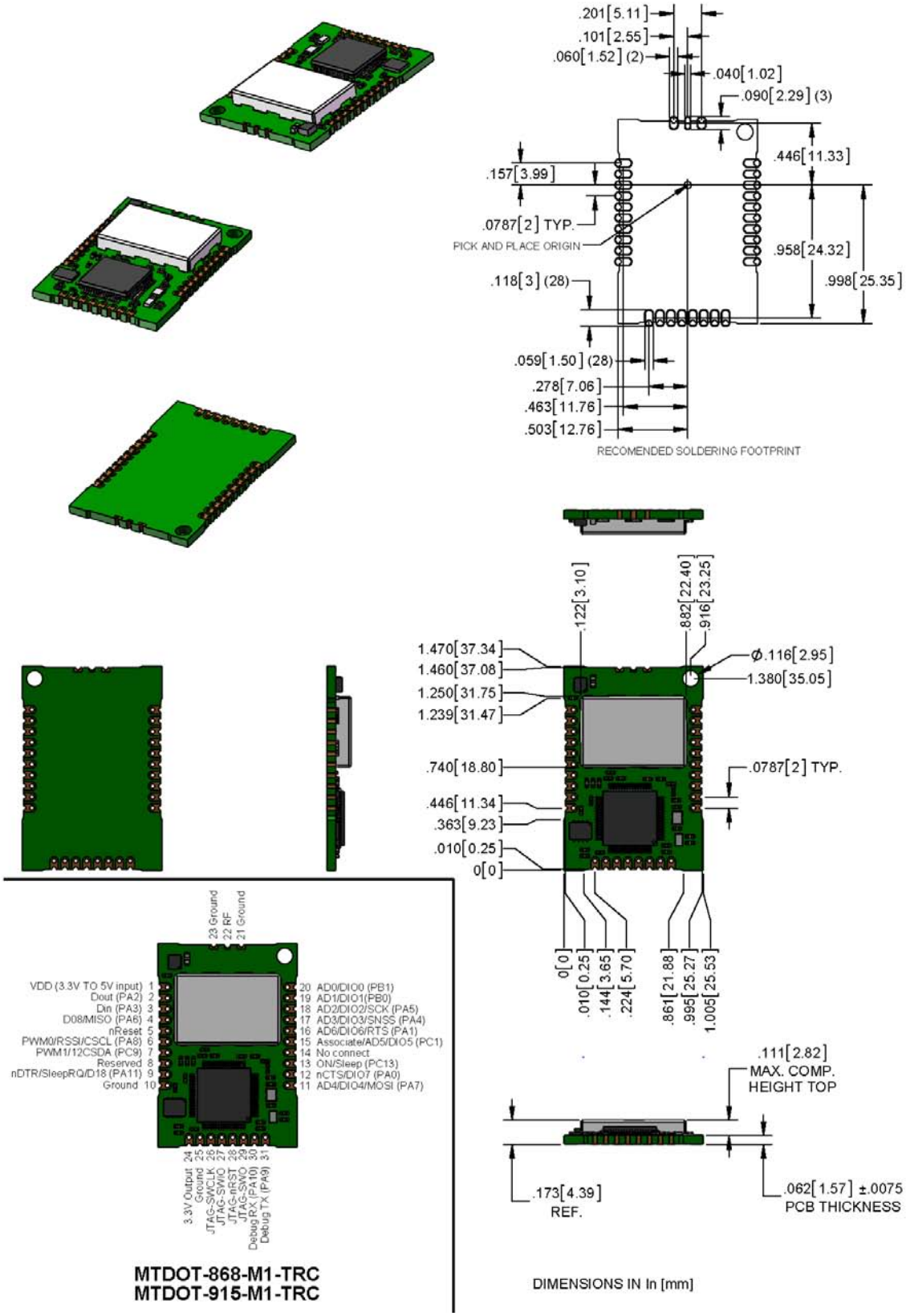

Chapter 3 Specifications and Pin Information

MTDOT Specifications

Category	Description
General	
Compatibility	LoRaWAN 1.0 specifications
Interfaces	Note that pin functions are multiplexed.
	Up to 16 digital I/O
	Up to 11 analog inputs
	SPI
	I2C
	UART (RX, TX, RTS, CTS)
	USB (OTG full speed)
CPU Performance	
CPU	STM32
Max Clock	100 MHz (configurable to control power use)
Flash Memory	512 KB (400 KB available)
RAM	128 KB
Radio Frequency	
ISM Bands	863 MHz - 868 MHz, 902 MHz - 928 MHz
Physical Description	
Weight[1]	0.2 oz. (5g)
Dimensions	Refer to Mechanical Drawings for Dimensions.
RF Connectors	
-SMA Models	SMA
-UFL Models	U.FL
-Trace Models	Trace Connection
Environment	
Operating Temperature	-40° C to +85° C
Storage Temperature	-40° C to +85° C
Humidity	20%-90% RH, non-condensing
Power Requirements	
Operating Voltage	3.3 V

Category	Description
Certifications and Compliance	
EMC Compliance	EN 300 220-2 V2.4.1:2012
	EN 301 489-03 V1.6.1:2013
Radio Compliance	FCC 15.247:2015
	FCC 15.109:2015
	FCC 15.107:2015
	RSS-210:2010
	ICES-003:2012
	CISPR 22:2008
	EN 300 220-2 V2.4.1:2012
Safety Compliance	UL 60950-1 2nd ED
	cUL 60950-1 2nd ED
	IEC 60950-1 2nd ED AM1 + AM2

[1]Weight is for the MTDOT-xxx-X1P-SMA, which is the heaviest model.

Category	Description	
Transmission[2]		
	North America	**EMEA**
Max Transmitter Power Output (TPO)	15 dBm	14 dBm
Maximum Receive Sensitivity	-137 dBm	-137 dBm
Link Budget[3]	147 dB Point-to-Point	147 dB Point-to-Point
Max Effective Isotropic Radiated Power (EiRP)	22 dBm	10 dBm
Receive Sensitivity		
Spreading Factor	**North America Typical Sensitivity**[4]	**EMEA Typical Sensitivity**[5]
6	-111 dBm	-121 dBm
7	-116 dBm	-124 dBm
8	-119 dBm	-127 dBm
9	-122 dBm	-130 dBm
10	-125 dBm	-133 dBm
11	Not Applicable	-135 dBm
12	Not Applicable	-137 dBm

[2]Using the Pulse Electronics W1063 antenna, described in the *Chapter 4, Antennas.*

[3]Greater link budget is possible with higher gain antenna.

[4]RFS_L500: RF sensitivity, Long-Range Mode, highest LNA gain, LNA boost, 500 kHz bandwidth using split Rx/Tx path.

[5]RFS_L125: RF sensitivity, Long-Range Mode, highest LNA gain, LNA boost, 125 kHz bandwidth using split Rx/Tx path.

Power Draw

Note:

- Sleep command is supported on firmware Version 0.1.2 and newer.
- Transmit power measured with MTDOT-915-xx transmitting to a MultiConnect Conduit with an MTAC-LORA-915 accessory card installed.
- mDot was Revision B PCB with firmware Version 0.0.14.
- Idle current measured with the mDot joined with Conduit, but idle without data transferring.
- Transmit power measured while transferring data packets using spread factor 9. Packet size limited to 53 bytes. The Conduit was set to receive packets from and send back to the mDot. A script was run to send the packet 100 times with either 10 or 53 bytes of data, with an average measurement taken during that time.
- For Inrush charge took five separate measurements and recorded the highest observed value.
- Power measurements are similar for 868 MHz models. Some 868 MHz sub-band frequencies do not support maximum TXP power of 20.

Voltage	Sleep Mode (Available on Version 0.1.2 or newer)	Idle current Average (Amps)	Packet Size (Bytes)	Average Current (Amps) at Low Transmit Power Setting (TXP 2)	Average Current (Amps) at Default Transmit Power Setting (TXP 11)	Average Current (Amps) at Maximum Transmit Power Setting (TXP 20)	Total Inrush Charge Measured in Millicoulombs (mC)	Total Inrush Charge Duration during Powerup (InRush Duration)
3.3	Standby Mode 30.9uA	0.032	10	0.026	0.028	0.031	1.14	661uS
		0.032	53	0.026	0.029	0.041	1.14	661uS
5.0	Standby Mode 33.5uA	0.032	10	0.026	0.028	0.032	1.79	1.24mS
		0.032	53	0.025	0.028	0.042	1.79	1.24mS

Electrical Characteristics

Signal	Description	Min	Max
Vin Low	Input low level	--	.99
Vin High	Input high level	2.31	--
Vout Low	Output low level	--	.4
Vout High	Output high level	2.9	--
VCC	Standard operating voltage	3.3	5
ICC	Operating current (mA) @5V	--	135
	Operating current (mA) @3.3V	--	200

Pin Information

Using the mbed platform with the Cortex-M4 processor expands your pin functionality options. Refer to the document, mDot Pin Function Mapping, which is available at www.multitech.net/developer/multiconnect-mdot and https://developer.mbed.org/platforms/MTS-mdot-f411/ for details.

MT Pin	STM32411 (Where applicable)	AT mbed Default Function	Other Functions	Description
1			VDD input	3.3 V to 5 V input
2	PA2	USART2_TX		GPIO/Defaulted to USART_Tx - RS232 on UDK2
3	PA3	USART2_RX		GPIO/Defaulted to USART_Rx - RS232 on UDK2
4	PA6	SPI1_MISO		SPI1_MISO
5	Reset	Reset		nReset input - 10K PU
6	PA8	I2C_SCL		I2C clock
7	PA9	I2C_SDA		I2C Serial data
8	PA12			GPIO
9	PA11			GPIO
10	VSSA/VSS_3/VSS_4		GND	Ground for VCC
11	PA7	SPI1_MOSI		PA_7/AD4/DIO4/SPI1_MOSI
12	PA0-WKUP	WAKE		Wake up from Standby on rising edge
13	PC13	ON_Sleep		Sleep On
14	No Connect			Not routed on board
15	PC1			GPIO

MT Pin	STM32411 (Where applicable)	AT mbed Default Function	Other Functions	Description
16	PA1			GPIO
17	PA4	SPI1_CS		PA_4/AD3/DIO3/SPI1_CS
18	PA5	SPI1_SCK		PA_5/AD2/DIO2/SPI1_SCK
19	PB0			PB_0/AD1/DIO1
20	PB1			PB_1/AD0/DIO0
21	Not a pin		GND	RF Ground for antenna - UFL or SMA
22	Not a pin			RF Antenna In/Out - UFL or SMA
23	Not a pin		GND	RF Ground for antenna - UFL or SMA
24	VDDA		Vout/Vref	3V @25ma reference voltage
25	VSSA/VSS_3/VSS_4		GND	Ground for VCC
26	PA14	JTMS-SWCLK		STMicro - JTAG Clock /Serial Wire Debug Clock
27	PA13	JTMS-SWIO		STMicro - JTAG Data I/O /Serial Wire Debug Data
28	PB4	JTMS-nRst		STMicro -JTAG reset
29	PB3	JTDO-SO		STMicro - SWO - Trace View
30	PA10	Debug RX		Debug RX/ routes to USB on UDK2
31	PA9	Debug TX		Debug TX/ routes to USB on UDK2

SPI Flash

Note: Using the SPI Flash, Micron M25P16 Family.

Pin	Function	Description
PC_12	SPI3_MOSI	SPI serial data IN
PC_11	SPI3_MISO	SPI serial data OUT
PC_10	SPI3_SCK	SPI clock
PC_6	SPI3_CS	SPI chipset
PC_7	FLASH_HOLD	#HOLD, the HOLD# signal is used to pause any serial communications with the device without deselecting the device
PC_8	FLASH_WP	Flash write protect

LoRa

Pin	Function
PC_0	LORA_RESET
PC_2	LORA_RXCTL
PC_3	LORA_TXCTL
PB_5	LORA_DIO0
PB_6	LORA_DIO1
PB_7	LORA_DIO2
PB_8	LORA_DIO3
PB_9	LORA_DIO4
PB_10	LORA_DIO5
LoRa/SPI2	
PB_12	LORA_NSS
PB_13	LORA_RXCTL
PB_14	LORA_MISO
PB_15	LORA_MOSI

mDot Pinout Design Notes

Refer to the mechanical drawing for your model for pin locations.

- All pins that go to connectors are directly connected to the processor.
- Reset is the only pin with pull up.
- I/O is 5V tolerant.

mDots allow you to program pins depending on your application:

- **Serial:** Available out of the box. See Serial Pinout Notes for details.
- **Xbee:** Comforms to the Xbee pinout.
- **mbed:** Designed with the mbed STM32F411 RET 64-pin processor, this option provides the most flexibility. For more information about processor capabilities, see the STM32F411 RET datasheet.

Note: To program the mDot, you need an mDot model with programming header., model MTDOT-xx-X1P-SMA

Serial Pinout Notes

Out of the box, these pins are available for serial applications. Refer to the mechanical drawing for your model for pin locations.

- 2 Dout/TX
- 3 Din/RX
- 9 DTR
- 12 CTS
- 13 On/Sleep
- 16 RTS

Serial Settings

When creating a serial connection with an mDot on the developer board, connect a serial cable to the DB-9 connector, open communications software (such as HyperTerminal or TeraTerm), and use the following settings:

- Baud rate = 115,200
- Data bits = 8
- Parity = N
- Stop bits = 1
- Flow control = Off

LoRa

Throughput Rates

Theoretical maximum speeds for LoRa mode with ACKs off are:

- Using spreading factor 7 at 125kHz, the throughput rate is 5470 bps (5.47 kbps).
- Using spreading factor 7 at 500kHz the receiving throughput rate is 21900 bps (21.9 kbps).

Note: Data rates in the LoRaWAN specification vary by geographic region.

Range

Variables effecting the mDot range include TX power, antenna gain, RX sensitivity, fade margin, earth's curvature. Use the following formula to calculate the maximum range:

$$Range_{Miles} = 10^{\left(\frac{TxPower + Antenna\ gain\ total - RX\ Sensitivity - Fade\ Margin - 36.56}{20} - LOG_{10}(F_{MHz})\right.}$$

The following table provides example settings and the theoretical maximum range based on these settings.

Example	18dB Transmit Power for 915 MHz Models	Units	Example 14dB Transmit Power for 868MHz Models
Frequency	915	MHz	868
TX Power	18	dBm	14
TX Antenna Gain	3	dB	3
RX Sensitivity[1]	-120	dBm	-120
RX Antenna Gain	3	dB	3
Fade Margin[2]	30	dB	30
Distance	8.14	Miles	5.41
Distance	13.08	Km	8.70

[1]RX Sensitivity is set to a conservative -120dBm, but can vary from -117 to -137dBm.

[2]Fade Margin is set at the worst case of 30dB. Fade margin is an allowance a system designer includes to account for unknown variables. The higher the fade margin, the better the overall link quality will be. With a fade margin set to zero, the link budget is still valid, but only in LOS conditions, which is not practical for most designs. The amount of fade margin to include in a calculation depends on the environment in which you will deploy the system. A fade margin of 12 dBm is good, but a better number would be 20 to 30 dBm.

Chapter 4 Antennas

Antenna System

The LoRa antenna performance depends on the implementation and antenna design. The integration of the antenna system into the product is a critical part of the design process; therefore, it is essential to consider it early so the performance is not compromised. If changes are made to the device's certified antenna system, then recertification will be required.

This radio transmitter has been approved with the antenna types listed below. The antenna used must maintain the same specifications. The antenna must be of the same type, with similar in-band and out-of-band radiation patterns. Antenna types not included on this list, or having a greater gain than the maximum gain indicated for the listed type, are strictly prohibited for use with this device.

U.FL and Trace Antenna Options

Currently, FCC approval includes Pulse Electronics SMA antenna only. If using U.FL or trace antennas, note the following:

- **For U.FL antennas:** The antenna and cable combination in your design cannot exceed the performance of the SMA antenna as listed in the next topic.
- **For a simple trace to RF antennas:** Routing must follow standard RF design rules and practices for stripline/miscrostrip for a 50 ohm impedance line. This option may require additional certification testing.

Pulse Electronics Antenna

Manufacturer:	Pulse Electronics
Description:	868-915 MHz RP-SMA Antenna, 8"
Model Number:	W1063
MultiTech Part Number:	45009830L

MultiTech ordering information:

Ordering Part Number	Quantity
AN868-915A-1HRA	1
AN868-915A-10HRA	10
AN868-915A-50HRA	50

Antenna Specifications

Category	Description
Frequency Range	868-928 MHz
Impedance	50 Ohms
VSWR	≤ 2.0
Gain	3.0 dBi

Category	Description
Radiation	Omni
Polarization	Vertical

OEM Integration

FCC & IC Information to Consumers

The user manual for the consumer must contain the statements required by the following FCC and IC regulations: 47 C.F.R. 15.19(a)(3), 15.21, 15.105 and RSS-Gen Issue 3, Dec 2010; 7.1.2 and 7.1.3

FCC Grant Notes

The OEM should follow all the grant notes listed below. Otherwise, further testing and device approvals may be necessary.

FCC Definitions

Portable: (§2.1093) — A portable device is defined as a transmitting device designed to be used so that the radiating structure(s) of the device is/are within 20 centimeters of the body of the user.

Mobile: (§2.1091) — A mobile device is defined as a transmitting device designed to be used in other than fixed locations and to generally be used in such a way that a separation distance of at least 20 centimeters is normally maintained between the transmitter's radiating structure(s) and the body of the user or nearby persons.

Actual content pending Grant: *This device is a mobile device with respect to RF exposure compliance. The antenna(s) used for this transmitter must be installed to provide a separation distance of at least 20 cm from all persons, and must not be collocated or operate in conjunction with any other antenna or transmitter except in accordance with FCC multi-transmitter product guidelines. Installers and end-users must be provided with specific information required to satisfy RF exposure compliance for installations and final host devices. (See note under Grant Limitations.) Compliance of this device in all final host configurations is the responsibility of the Grantee.*

> **Note:** Host design configurations constituting a device for portable use (<20 cm from human body) require separate FCC/IC approval.

Host Labeling

The following statements are required to be on the host label:

> This device contains FCC ID: {Add the FCC ID of the specific device}
> This device contains equipment certified under IC ID: {Add the IC ID of the specific device}

For additional labeling requirements, see the product's Labeling Requirements. For the FCC and IC IDs, see specific certificate information in the Regulatory Statement chapter.

Chapter 5 Safety Information

Handling Precautions

To avoid damage due to the accumulation of static charge, use proper precautions when handling any cellular device. Although input protection circuitry has been incorporated into the devices to minimize the effect of static build-up, use proper precautions to avoid exposure to electronic discharge during handling and mounting the device.

Radio Frequency (RF) Safety

Due to the possibility of radio frequency (RF) interference, it is important that you follow any special regulations regarding the use of radio equipment. Follow the safety advice given below.

- Operating your device close to other electronic equipment may cause interference if the equipment is inadequately protected. Observe any warning signs and manufacturers' recommendations.
- Different industries and businesses restrict the use of cellular devices. Respect restrictions on the use of radio equipment in fuel depots, chemical plants, or where blasting operations are in process. Follow restrictions for any environment where you operate the device.
- Do not place the antenna outdoors.
- Switch OFF your wireless device when in an aircraft. Using portable electronic devices in an aircraft may endanger aircraft operation, disrupt the cellular network, and is illegal. Failing to observe this restriction may lead to suspension or denial of cellular services to the offender, legal action, or both.
- Switch OFF your wireless device when around gasoline or diesel-fuel pumps and before filling your vehicle with fuel.
- Switch OFF your wireless device in hospitals and any other place where medical equipment may be in use.

Sécurité relative aux appareils à radiofréquence (RF)

À cause du risque d'interférences de radiofréquence (RF), il est important de respecter toutes les réglementations spéciales relatives aux équipements radio. Suivez les conseils de sécurité ci-dessous.

- Utiliser l'appareil à proximité d'autres équipements électroniques peut causer des interférences si les équipements ne sont pas bien protégés. Respectez tous les panneaux d'avertissement et les recommandations du fabricant.
- Certains secteurs industriels et certaines entreprises limitent l'utilisation des appareils cellulaires. Respectez ces restrictions relatives aux équipements radio dans les dépôts de carburant, dans les usines de produits chimiques, ou dans les zones où des dynamitages sont en cours. Suivez les restrictions relatives à chaque type d'environnement où vous utiliserez l'appareil.
- Ne placez pas l'antenne en extérieur.
- Éteignez votre appareil sans fil dans les avions. L'utilisation d'appareils électroniques portables en avion est illégale: elle peut fortement perturber le fonctionnement de l'appareil et désactiver le réseau cellulaire. S'il ne respecte pas cette consigne, le responsable peut voir son accès aux services cellulaires suspendu ou interdit, peut être poursuivi en justice, ou les deux.
- Éteignez votre appareil sans fil à proximité des pompes à essence ou de diesel avant de remplir le réservoir de votre véhicule de carburant.

- Éteignez votre appareil sans fil dans les hôpitaux ou dans toutes les zones où des appareils médicaux sont susceptibles d'être utilisés.

Interference with Pacemakers and Other Medical Devices

Potential interference

Radiofrequency energy (RF) from cellular devices can interact with some electronic devices. This is electromagnetic interference (EMI). The FDA helped develop a detailed test method to measure EMI of implanted cardiac pacemakers and defibrillators from cellular devices. This test method is part of the Association for the Advancement of Medical Instrumentation (AAMI) standard. This standard allows manufacturers to ensure that cardiac pacemakers and defibrillators are safe from cellular device EMI.

The FDA continues to monitor cellular devices for interactions with other medical devices. If harmful interference occurs, the FDA will assess the interference and work to resolve the problem.

Precautions for pacemaker wearers

If EMI occurs, it could affect a pacemaker in one of three ways:

- Stop the pacemaker from delivering the stimulating pulses that regulate the heart's rhythm.
- Cause the pacemaker to deliver the pulses irregularly.
- Cause the pacemaker to ignore the heart's own rhythm and deliver pulses at a fixed rate.

Based on current research, cellular devices do not pose a significant health problem for most pacemaker wearers. However, people with pacemakers may want to take simple precautions to be sure that their device doesn't cause a problem.

- Keep the device on the opposite the side of the body from the pacemaker to add extra distance between the pacemaker and the device.
- Avoid placing a turned-on device next to the pacemaker (for example, don’t carry the device in a shirt or jacket pocket directly over the pacemaker).

Device Maintenance

When maintaining your device:

- Do not attempt to disassemble the device. There are no user serviceable parts inside.
- Do not expose your device to any extreme environment where the temperature or humidity is high.
- Do not expose the device to water, rain, or spilled beverages. It is not waterproof.
- Do not place the device alongside computer discs, credit or travel cards, or other magnetic media. The information contained on discs or cards may be affected by the device.
- Using accessories, such as antennas, that MultiTech has not authorized or that are not compliant with MultiTech's accessory specifications may invalidate the warranty.

If the device is not working properly, contact MultiTech Technical Support.

User Responsibility

Respect all local regulations for operating your wireless device. Use the security features to block unauthorized use and theft.

Chapter 6 Regulatory Information

EMC, Safety, and R&TTE Directive Compliance

CE

The CE mark is affixed to this product to confirm compliance with the following European Community Directives:

Council Directive 2004/108/EC of 15 December 2004 on the approximation of the laws of Member States relating to electromagnetic compatibility;
and
Council Directive 2006/95/EC of 12 December 2006 on the harmonization of the laws of Member States relating to electrical equipment designed for use within certain voltage limits;
and
Council Directive 2011/65/EU on the restriction of the use of certain hazardous substances in electrical and electronic equipment;
and
Council Directive 1999/5/EC of 9 March 1999 on radio equipment and telecommunications terminal equipment and the mutual recognition of their conformity.

47 CFR Part 15 Regulation Class B Devices

This equipment has been tested and found to comply with the limits for a Class B digital device, pursuant to part 15 of the FCC Rules. These limits are designed to provide reasonable protection against harmful interference in a residential installation. This equipment generates, uses, and can radiate radio frequency energy and, if not installed and used in accordance with the instructions, may cause harmful interference to radio communications. However, there is no guarantee that interference will not occur in a particular installation. If this equipment does cause harmful interference to radio or television reception, which can be determined by turning the equipment off and on, the user is encouraged to try to correct the interference by one or more of the following measures:

- Reorient or relocate the receiving antenna.
- Increase the separation between the equipment and receiver.
- Connect the equipment into an outlet on a circuit different from that to which the receiver is connected.
- Consult the dealer or an experienced radio/TV technician for help.

Warning: Changes or modifications to this unit not expressly approved by the party responsible for compliance could void the user's authority to operate the equipment.

FCC Interference Notice

Per FCC 15.19(a)(3) and (a)(4) This device complies with part 15 of the FCC Rules. Operation is subject to the following two conditions: (1) This device may not cause harmful interference, and (2) this device must accept any interference received, including interference that may cause undesired operation.

FCC Grant

FCC Part 15

FCC Identifier:	AU792U13A16857
Equipment Class:	Digital Transmission System
Notes:	MTDOT-915
FCC Rule Parts:	15C
Approval:	Single Modular
Frequency Range:	902.3-914.9
Output Watts:	0.0772

Output power is conducted. This transmitter is a hybrid per FCC 15.247(f) and FCC KDB 453039. The antenna(s) used for this transmitter must be installed to provide a separation distance of at least 20 cm from all persons and must not be collocated or operating in conjunction with any other antenna or transmitter within a host device, except in accordance with FCC multi-transmitter product procedures. End-users and installers must be provided with antenna installation instructions and transmitter operating conditions for satisfying RF exposure compliance.

FCC Notice

The MTDOT-x family of products are open development based products that contain a sub ghz radio technology. MultiTech has certified for compliance with US and Foreign compliance bodies including FCC, R&TTE and others. (e.g. FCC 15.247:2015 & IC RSS-210:2010)

MultiTech provides software code meant to operate the radio to a level that maintains compliance with the operating modes under which these radio devices were certified. To ensure this level of compliance, the software code is provided in binary form only. Users are prohibited from making any changes that affect the operation of the radio performance. Accessing or controlling the radio through any means other than the provided binary software will require the user to obtain their own intentional radiator license from the certification body governing their locality, as all precertification provided with mDot will have been made invalid.

Industry Canada Class B Notice

This Class B digital apparatus meets all requirements of the Canadian Interference-Causing Equipment Regulations.

Cet appareil numérique de la classe B respecte toutes les exigences du Reglement Canadien sur le matériel brouilleur.

This device complies with Industry Canada RSS Appliance radio exempt from licensing. The operation is permitted for the following two conditions:

1. the device may not cause harmful interference, and
2. the user of the device must accept any interference suffered, even if the interference is likely to jeopardize the operation.

Le présent appareil est conforme aux CNR d'Industrie Canada applicables aux appareils radio exempts de licence. L'exploitation est autorisée aux deux conditions suivantes:

1. l'appareil ne doit pas produire de brouillage, et

2. l'utilisateur de l'appareil doit accepter tout brouillage radioélectrique subi, même si le brouillage est susceptible d'en compromettre le fonctionnement.

Industry Canada

Certification Number/No. de Certification	125A-0054
Type of Radio Equipment/Genre de Matériel	Spread Spectrum/Digital Device (902-928MHz)/
	Modular Approval/Approbation modulaire
Model/Modèle	MTDOT-915

Specification/ Cahier des Charges	Issue/ Édition	From Frequency/ De Fréquences	To Frequency/ Á Fréquences	Emmission Designation/ Designation D'émission	Minimum Power	Maximum Power
RSS247	1.0	902.3 MHz	914.9 MHz	GXDXX	77.2 mW	77.2 mW

Certification of equipment means only that the equipment has met the requirements of the above noted specification. License applications, where applicable to use certified equipment, are acted on accordingly by the Industry Canada issuing office and will depend on the existing radio environment, service and location of operation. This certificate is issued on condition that the holder complies and will continue to comply with the requirements and procedures issued by Industry Canada. The equipment for which this certificate is issued shall not be manufactured, imported distributed, leased, offered for sale or sold unless the equipment complies with the applicable technical specifications and procedures issued by Industry Canada.

La certification du matériel signifie seulement que le matériel a satisfait aux exigences de la norme indiquée ci-dessus. Les demandes de licences nécessaires pour l'utilisation du matériel certifié sont traitées en conséquence par le bureau de délivrance d'Industrie Canada et dépendent des conditions radio ambiantes, du service et de l'emplacement d'exploitation. Le présent certificat est délivré à la condition que le titulaire satisfasse et continue de satisfaire aux exigences et aux procédures d'Industrie Canada. Le matériel à l'égard duquel le présent certificat est délivré ne doit pas être fabriqué, importé, distribué, loué, mis en vente ou vendu à moins d'être conforme aux procédures et aux spécifications techniques applicable publiées par Industrie Canada.

Chapter 7 Environmental Notices

Waste Electrical and Electronic Equipment Statement

Note: This statement may be used in documentation for your final product applications.

WEEE Directive

The WEEE Directive places an obligation on EU-based manufacturers, distributors, retailers, and importers to take-back electronics products at the end of their useful life. A sister directive, ROHS (Restriction of Hazardous Substances) complements the WEEE Directive by banning the presence of specific hazardous substances in the products at the design phase. The WEEE Directive covers all MultiTech products imported into the EU as of August 13, 2005. EU-based manufacturers, distributors, retailers and importers are obliged to finance the costs of recovery from municipal collection points, reuse, and recycling of specified percentages per the WEEE requirements.

Instructions for Disposal of WEEE by Users in the European Union

The symbol shown below is on the product or on its packaging, which indicates that this product must not be disposed of with other waste. Instead, it is the user's responsibility to dispose of their waste equipment by handing it over to a designated collection point for the recycling of waste electrical and electronic equipment. The separate collection and recycling of your waste equipment at the time of disposal will help to conserve natural resources and ensure that it is recycled in a manner that protects human health and the environment. For more information about where you can drop off your waste equipment for recycling, please contact your local city office, your household waste disposal service or where you purchased the product.

July, 2005

REACH Statement

Registration of Substances

After careful review of the legislation and specifically the definition of an “article” as defined in EC Regulation 1907/2006, Title II, Chapter 1, Article 7.1(a)(b), it is our current view Multi-Tech Systems, Inc. products would be considered as “articles”. In light of the definition in § 7.1(b) which requires registration of an article only if it contains a regulated substance that “is intended to be released under normal or reasonably foreseeable conditions of use,” Our analysis is that Multi-Tech Systems, Inc. products constitute nonregisterable articles for their intended and anticipated use.

Substances of Very High Concern (SVHC)

Per the candidate list of Substances of Very High Concern (SVHC) published October 28, 2008 we have reviewed these substances and certify the Multi-Tech Systems, Inc. products are compliant per the EU “REACH” requirements of less than 0.1% (w/w) for each substance. If new SVHC candidates are published by the European Chemicals Agency, and relevant substances have been confirmed, that exceeds greater than 0.1% (w/w), Multi-Tech Systems, Inc. will provide updated compliance status.

Multi-Tech Systems, Inc. also declares it has been duly diligent in ensuring that the products supplied are compliant through a formalized process which includes collection and validation of materials declarations and selective materials analysis where appropriate. This data is controlled as part of a formal quality system and will be made available upon request.

Restriction of the Use of Hazardous Substances (RoHS)

Multi-Tech Systems, Inc.

Certificate of Compliance

2011/65/EU

Multi-Tech Systems, Inc. confirms that its embedded products comply with the chemical concentration limitations set forth in the directive 2011/65/EU of the European Parliament (Restriction of the use of certain Hazardous Substances in electrical and electronic equipment - RoHS).

These MultiTech products do not contain the following banned chemicals[1]:

- Lead, [Pb] < 1000 PPM
- Mercury, [Hg] < 1000 PPM
- Hexavalent Chromium, [Cr+6] < 1000 PPM
- Cadmium, [Cd] < 100 PPM
- Polybrominated Biphenyl, [PBB] < 1000 PPM
- Polybrominated Diphenyl Ether, [PBDE] < 1000 PPM

Environmental considerations:

- Moisture Sensitivity Level (MSL) =1
- Maximum Soldering temperature = 260C (in SMT reflow oven)

[1]Lead usage in some components is exempted by the following RoHS annex, therefore higher lead concentration would be found in some modules (>1000 PPM);

- Resistors containing lead in a glass or ceramic matrix compound.

Information on HS/TS Substances According to Chinese Standards

In accordance with China's Administrative Measures on the Control of Pollution Caused by Electronic Information Products (EIP) # 39, also known as China RoHS, the following information is provided regarding the names and concentration levels of Toxic Substances (TS) or Hazardous Substances (HS) which may be contained in Multi-Tech Systems Inc. products relative to the EIP standards set by China's Ministry of Information Industry (MII).

Hazardous/Toxic Substance/Elements

Name of the Component	Lead (PB)	Mercury (Hg)	Cadmium (CD)	Hexavalent Chromium (CR6+)	Polybrominated Biphenyl (PBB)	Polybrominated Diphenyl Ether (PBDE)
Printed Circuit Boards	O	O	O	O	O	O
Resistors	X	O	O	O	O	O
Capacitors	X	O	O	O	O	O
Ferrite Beads	O	O	O	O	O	O
Relays/Opticals	O	O	O	O	O	O
ICs	O	O	O	O	O	O
Diodes/ Transistors	O	O	O	O	O	O
Oscillators and Crystals	X	O	O	O	O	O
Regulator	O	O	O	O	O	O
Voltage Sensor	O	O	O	O	O	O
Transformer	O	O	O	O	O	O
Speaker	O	O	O	O	O	O
Connectors	O	O	O	O	O	O
LEDs	O	O	O	O	O	O
Screws, Nuts, and other Hardware	X	O	O	O	O	O
AC-DC Power Supplies	O	O	O	O	O	O
Software /Documentation CDs	O	O	O	O	O	O
Booklets and Paperwork	O	O	O	O	O	O
Chassis	O	O	O	O	O	O

X Represents that the concentration of such hazardous/toxic substance in all the units of homogeneous material of such component is higher than the SJ/Txxx-2006 Requirements for Concentration Limits.
O Represents that no such substances are used or that the concentration is within the aforementioned limits.

Information on HS/TS Substances According to Chinese Standards (in Chinese)

依照中国标准的有毒有害物质信息

根据中华人民共和国信息产业部 (MII) 制定的电子信息产品 (EIP) 标准－中华人民共和国《电子信息产品污染控制管理办法》（第 39 号），也称作中国 RoHS, 下表列出了 Multi-Tech Systems, Inc. 产品中可能含有的有毒物质 (TS) 或有害物质 (HS) 的名称及含量水平方面的信息。

有害/有毒物质/元素

成分名称	铅 (PB)	汞 (Hg)	镉 (CD)	六价铬 (CR6+)	多溴联苯 (PBB)	多溴二苯醚 (PBDE)
印刷电路板	O	O	O	O	O	O
电阻器	X	O	O	O	O	O
电容器	X	O	O	O	O	O
铁氧体磁环	O	O	O	O	O	O
继电器/光学部件	O	O	O	O	O	O
ICs	O	O	O	O	O	O
二极管/晶体管	O	O	O	O	O	O
振荡器和晶振	X	O	O	O	O	O
调节器	O	O	O	O	O	O
电压传感器	O	O	O	O	O	O
变压器	O	O	O	O	O	O
扬声器	O	O	O	O	O	O
连接器	O	O	O	O	O	O
LEDs	O	O	O	O	O	O
螺丝、螺母以及其它五金件	X	O	O	O	O	O
交流-直流电源	O	O	O	O	O	O
软件/文档 CD	O	O	O	O	O	O
手册和纸页	O	O	O	O	O	O
底盘	O	O	O	O	O	O

X 表示所有使用类似材料的设备中有害/有毒物质的含量水平高于 SJ/Txxx-2006 限量要求。
O 表示不含该物质或者该物质的含量水平在上述限量要求之内。

Chapter 8 Labels

Approvals and Certification

In most cases, when integrated and used with an antenna system that was part of the MultiTech modem certification, additional approvals or certifications are not required for the device you develop as long as the following are met.

- **PTCRB Requirements:** The antenna system cannot be altered.
- **Model Identification:** The MultiTech model identification allows the carrier to verify the modem as one of its approved models. This information is located on the modem's label below the bar code.

Example Labels

Note: Actual labels vary depending on the regulatory approval markings and content.

This device complies with part 15 of the FCC Rules. Operation is subject to the following two conditions: (1) This device may not cause harmful interference, and (2) this device must accept any interference received, including interference that may cause undesired operation.

The label shown is not the actual size.

1 - MultiTech Model Identification.
2 - MultiTech Ordering Part Number.
3 - Device Node Number.

Example North America Package Label

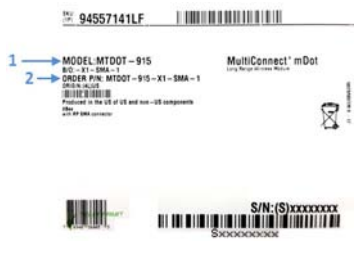

Example EMEA Package Label

North America Device Label

EMEA Device Label

Chapter 9 Developer Kit Overview

Developer Board Overview

MultiTech offers three Developer Kits for prototyping and developing with the mDot:

- **MTUDK2-ST-CELL** is a full developer board and kit compatible with several MultiTech devices.

Warning: Do not use an mDot and a Dragonfly or Socketmodem on this board at the same time. Doing to may damage both devices.

- **MTUDK2-ST-MDOT** is a scaled down version of the developer board and kit for the mDot.
- **MTMDK-ST-MDOT** is a mini developer board exclusively for the mDot. If using the Micro DK, go to *Chapter 13 Micro Developer Kit* for details on this developer board.

Developer kits help streamline your development efforts and evaluate your products and applications. Easily plug in your communications device and use the developer kit for testing, programming and evaluation.

Note: Developer information in this section applies to using either MTUDK2 developer kit with an mDot; however, the illustrations show the MTUDK2-ST-MDOT model.

Developer Board Features

- USB and serial interfaces
- USB port for mbed development environment
- RS-232 DB-9 connector for serial interface
- Arduino shield socket

MTUDK2-ST-MDOT Developer Kit Contents

The MTUDK2-ST-MDOT Developer Kit includes the following:

Developer Board	1 - MTUDK 2.0 mDot Developer Board
Cables	1 - Micro USB Cable
	1 - RSMA-U.FL Antenna Cables (attached to developer board)
Antennas	1 - 868-945 MHz Antenna
Customer Notices	Quick Start
Additional	One promotional screwdriver

MTUDK2-ST-CELL Developer Kit Contents

The MTUDK2-ST-CELL Developer Kit includes the following:

Developer Board	1 - MTUDK 2.0 Cell Developer Board

Power Supply	1 - 100-240V 9V-1.7A power supply with removable blades
	1 - NAM blade/plug,
	1 - EURO blade/plug
	1 - UK blade/plug
	1 - AU/NZ blade/plug
Cables	1 - Micro USB Cable
	3 - SMA-U.FL Antenna Cables (attached to developer board)
Antennas	1 - 3.3V magnetic GPS Antenna
	2 - 700-2600 MHz Antennas
Customer Notices	Quick Start
Additional	One promotional screwdriver

Chapter 10 Board Components

Developer Board

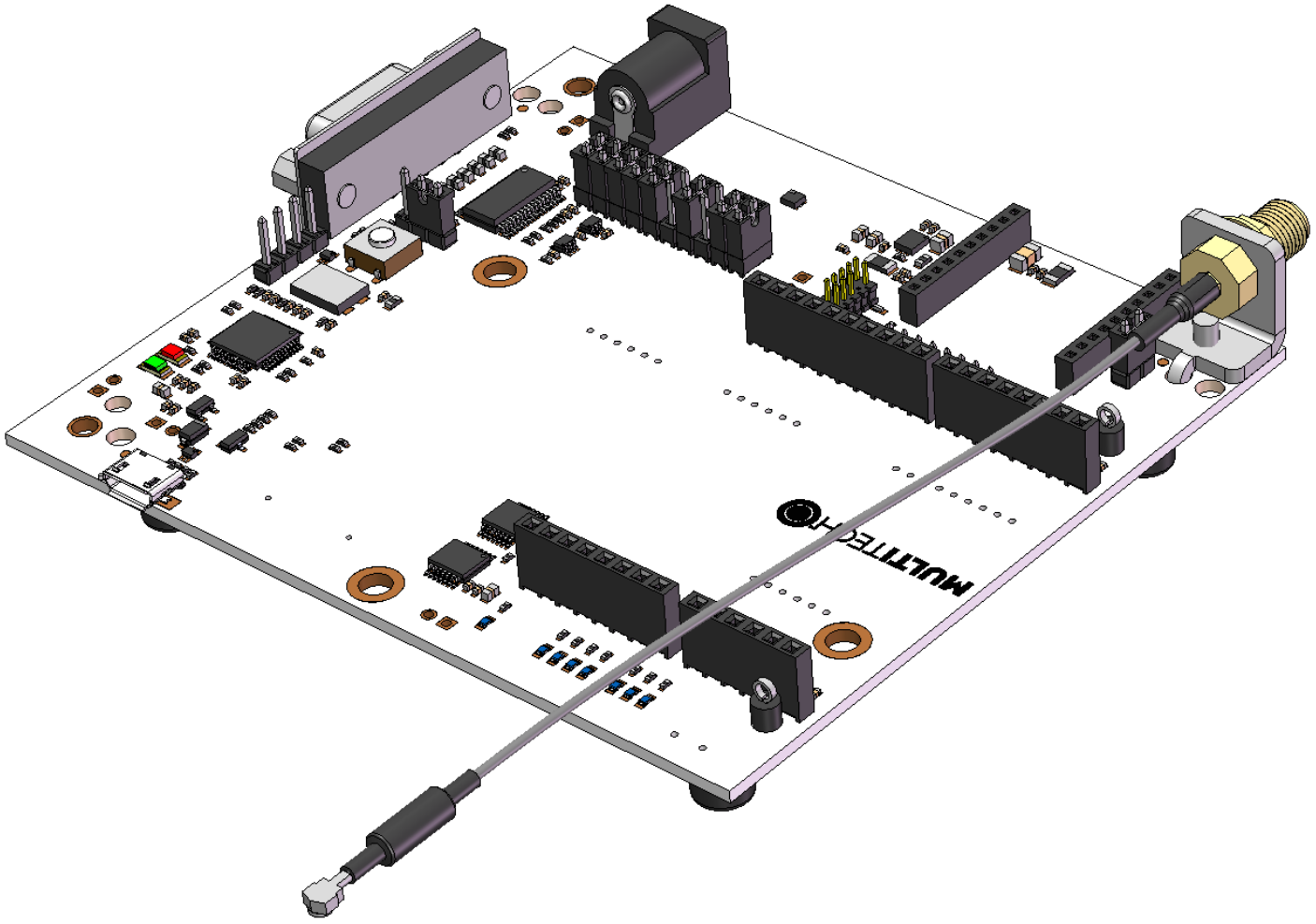

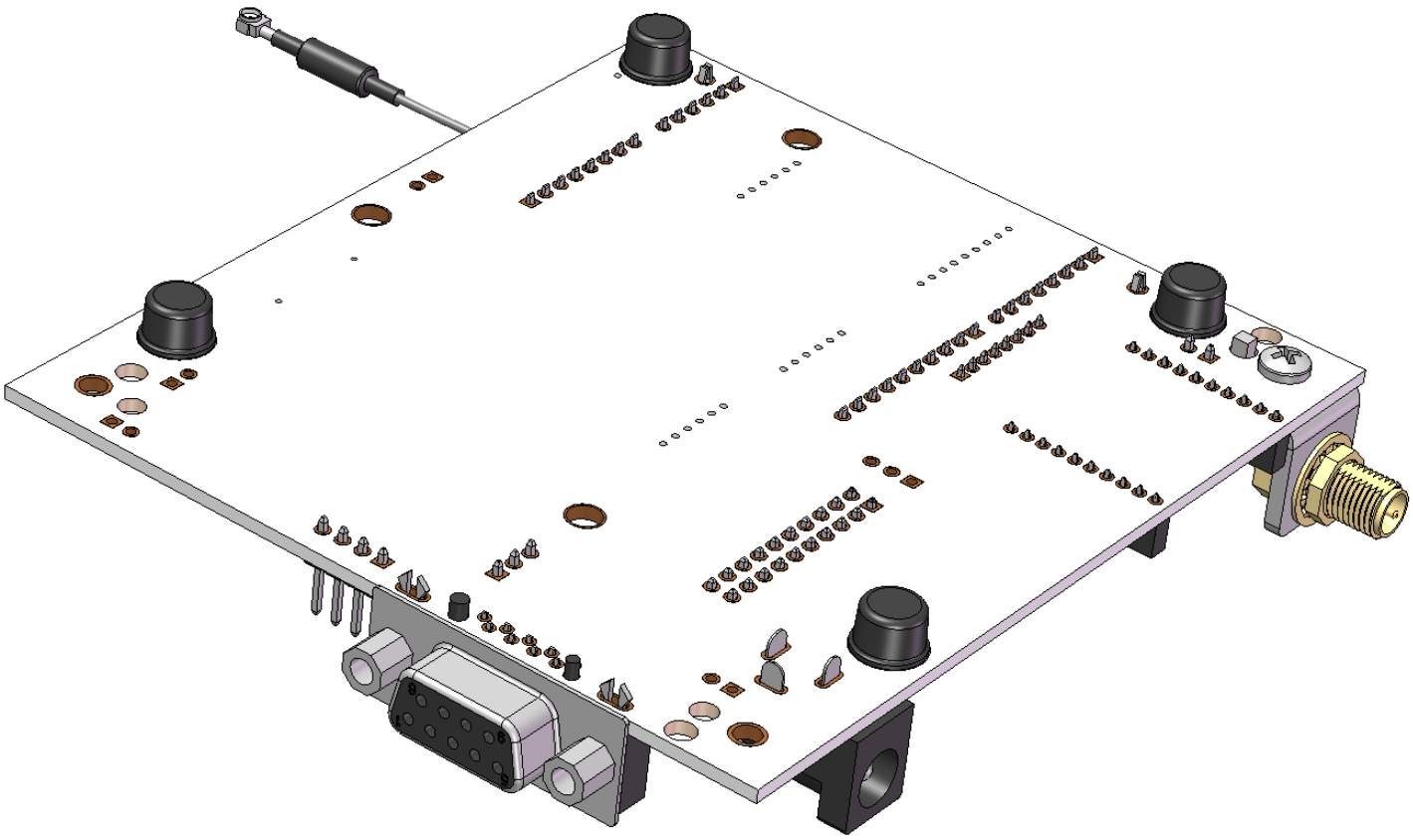

Developer Board Connectors

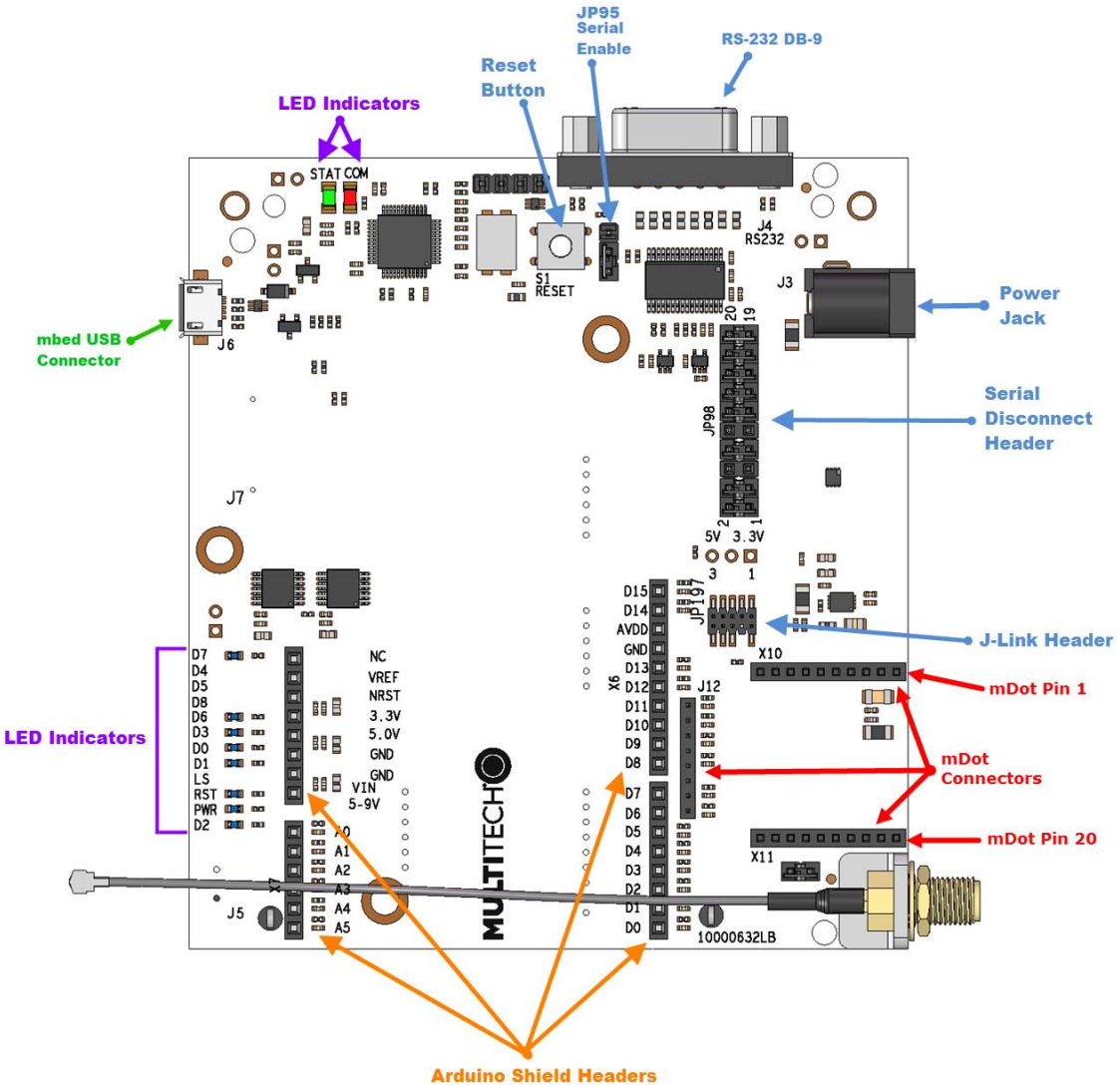

Board Components

Label	Description
J4	RS232 DB-9 Serial Connector , used to access the mDot AT command interface.
J6	mbed USB Connector, attaches to the ST Micro controller. This provides access to two interfaces, one used to program the mDot and the other for debug messages.
JP98	Serial Disconnect Header. Pins D0-D8 are connected to the Arduino headers and the DB9 serial port. Remove these jumpers to disconnect from the RS232 transceiver chip.
JP197	J-Link Header, used for JTAG access to the mDot. This requires installing resistors R94-96 & 98 and removing R88-990 & 92. See *Chapter 12 Developer Board Schematics*.
S1	Reset Button. Use to reset the processor of the device attached to the board.

Label	Description
X6	Arduino Shield Connector.
X7	Arduino Shield Connector.
X8	Arduino Shield Connector.
X9	Arduino Shield Connector.
X10	MTDOT Connector.
X11	MTDOT Connector.
J12	MTDOT Programming Header.

CAUTION: Take care when connecting or disconnecting USB cables to avoid detaching the connector from the board.

LED Indicators

Label	LED	Location
STAT	LED1	Same side as RS-232 DB-9 connector
COM	LED2	Same side as RS-232 DB-9 connector
D7	LED3	Across the mDot connectors.
D6	LED7	Directly across from the mDot connectors.
D3	LED8	Directly across from the mDot connectors.
D0	LED9	Directly across from the mDot connectors.
D1	LED10	Directly across from the mDot connectors.
RST	LED12	Directly across from the mDot connectors.
PWR	LED13	Directly across from the mDot connectors.
D2	LED14	Directly across from the mDot connectors.

Chapter 11 Developer Board Installation

Installing an mDot on the Developer Board

To install an mDot on the Developer Board:

1. Align the mDot with the developer board as shown.

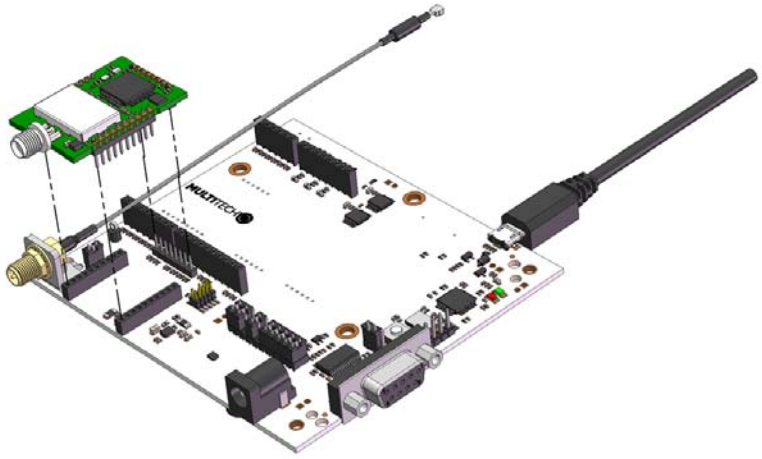

2. Gently press the mDot into the connectors.

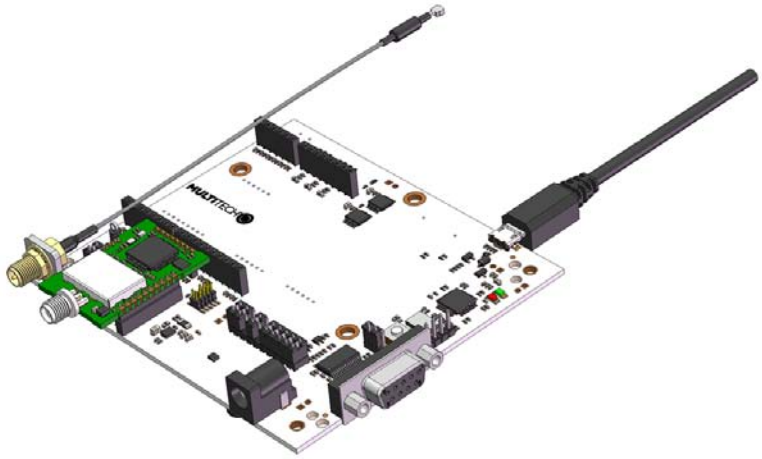

Arduino Shield

mDot Arduino Pins

Signals (module pin) micro pin		Arduino Shield						Signals (module pin) micro pin
					D15			PWM0/RSSI/I2CSCL (6) PA8
					D14			PWM1/I2CSDA (7) PC9
					AVDD			3.3V
					GND			Ground
			NC		D13		X6	AD2/DIO2/SCK (18) PA5
3.3V			VREF		D12			DO8/MISO (4) PA6
nReset, from pushbutton			nRST		D11			AD4/DIO4/MOSI (11) PA7
3.3V			3.3V		D10			AD3/DIO3/SNSS (17) PA4
5.0V	X9		5.0V		D9			no connect
Ground			GND		D8			no connect
Ground			GND					
5-9V input from J3			VIN		D7			nDTR/SleepRQ/DI8 (9) PA11
					D6			nRTS/AD6/DIO6 (16) PA1
AD0/DIO0 (20) PB1			A0		D5			no connect
AD1/DIO1 (19) PB0			A1		D4		X8	no connect
Associate/AD5/DIO5 (15) PC1	X7		A2		D3			nCTS/DIO7 (12) PA0
no connect			A3		D2			ON/nSleep (13) PC13
no connect			A4		D1			Dout (2) PA2
no connect			A5		D0			Din (3) PA3

Installing an Arduino Shield with an mDot

Note: When using an Arduino Shield with an mDot, install the mDot on the developer board before installing the Arduino shield.

To use an Arduino Shield with an mDot:

1. Disable the developer card's serial port by removing jumper from JP95.
   - Jumper pins 1-2: Disable U5 on USB VCC high.
   - Jumper pins 2-3: U5 always disabled.
   - Default jumper position is on pins 1-2.
2. Align the Arduino Shield on the developer board as shown.

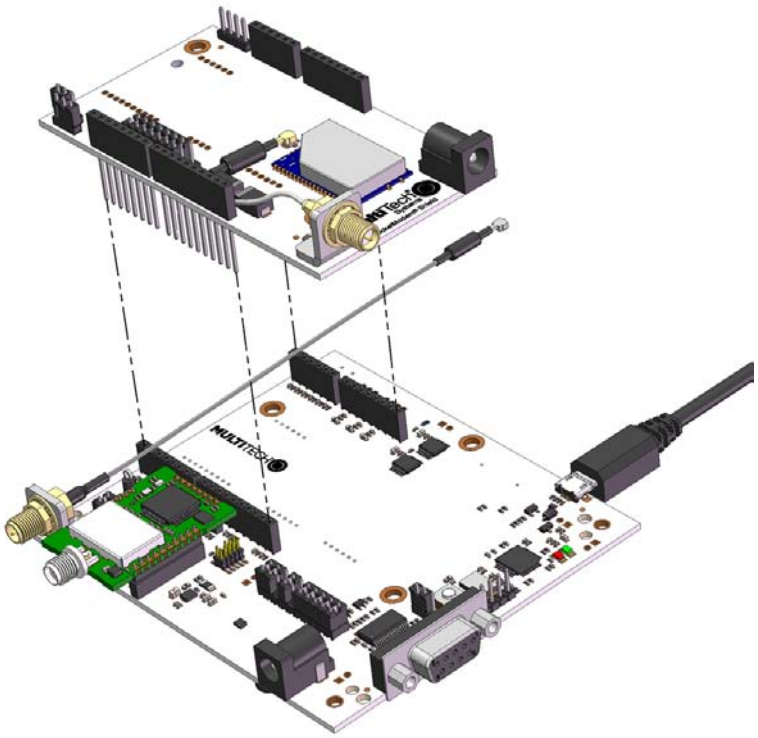

RSMA to U.FL Cables

The developer kit includes one 4.5" RSMA to U.FL cables which is preinstalled on the developer board.

Connecting an Antenna through the Developer Board Connectors

Depending on the mDot model, either connect the antenna directly to the mDot or through the RSMA-to-U.FL antenna cable on the developer board.

To connect an antenna to the device through the developer board :

1. Finger tighten the antenna to the SMA connector.
2. Attach the U.FL connector from the cable to the connector on the device.

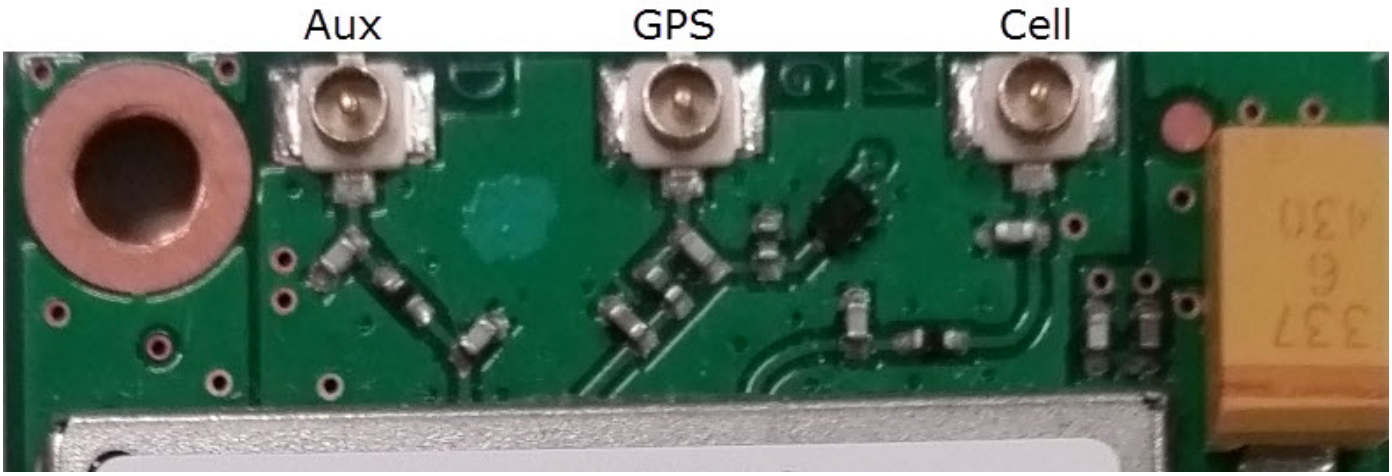
Aux
GPS
Cell

Chapter 12 Developer Board Schematics

Block Diagram

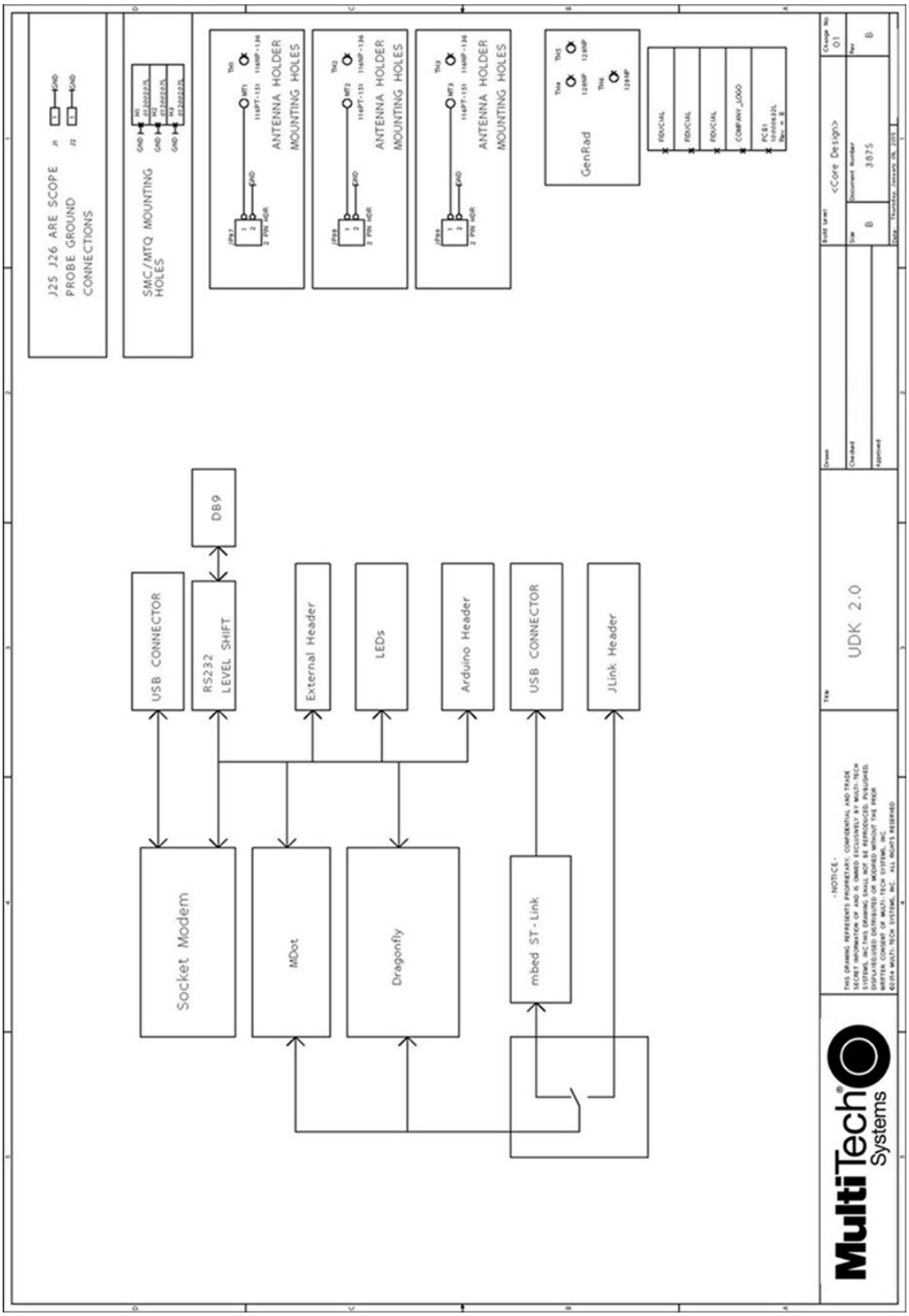

Schematics

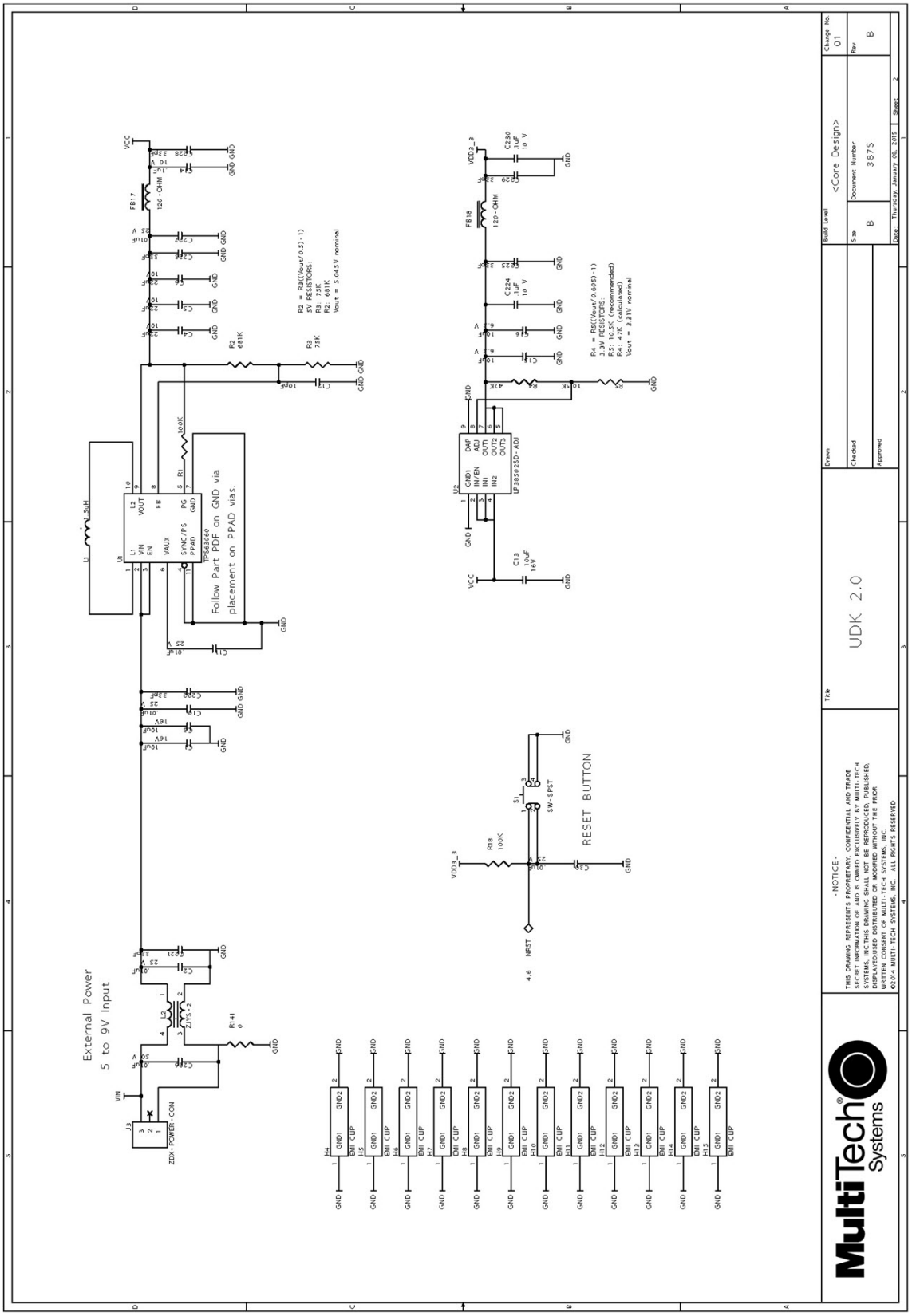
External Power
5 to 9V Input
Follow Part PDF on GND via placement on PPAD Vias.
RESET BUTTON
UDK 2.0
MultiTech Systems

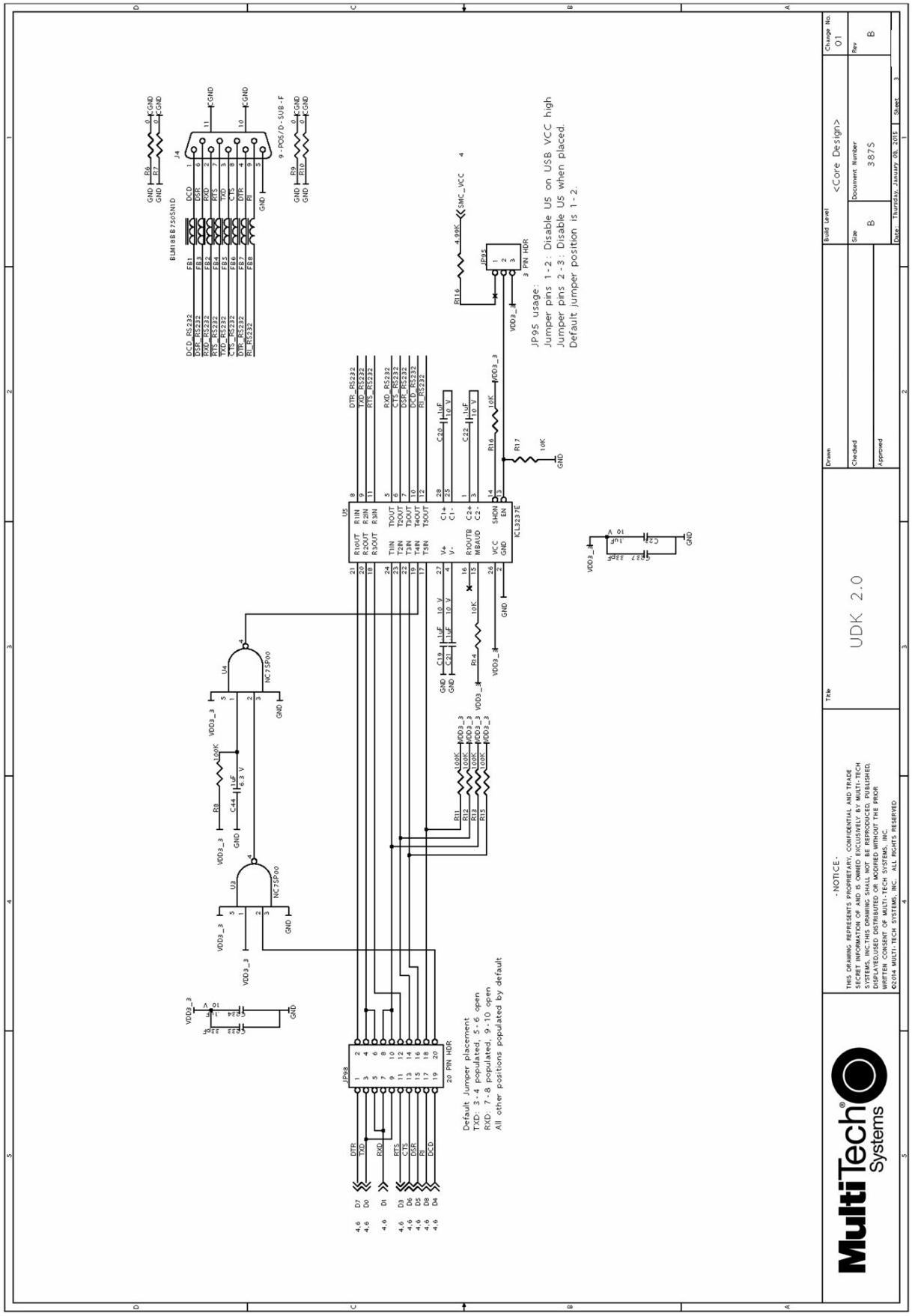
JP95 usage:
Jumper pins 1-2: Disable U5 on USB VCC high
Jumper pins 2-3: Disable U5 when placed.
Default jumper position is 1-2.
Default Jumper placement
TXD: 3-4 populated, 5-6 open
RXD: 7-8 populated, 9-10 open
All other positions populated by default
UDK 2.0
<Core Design>
387S
MultiTech Systems

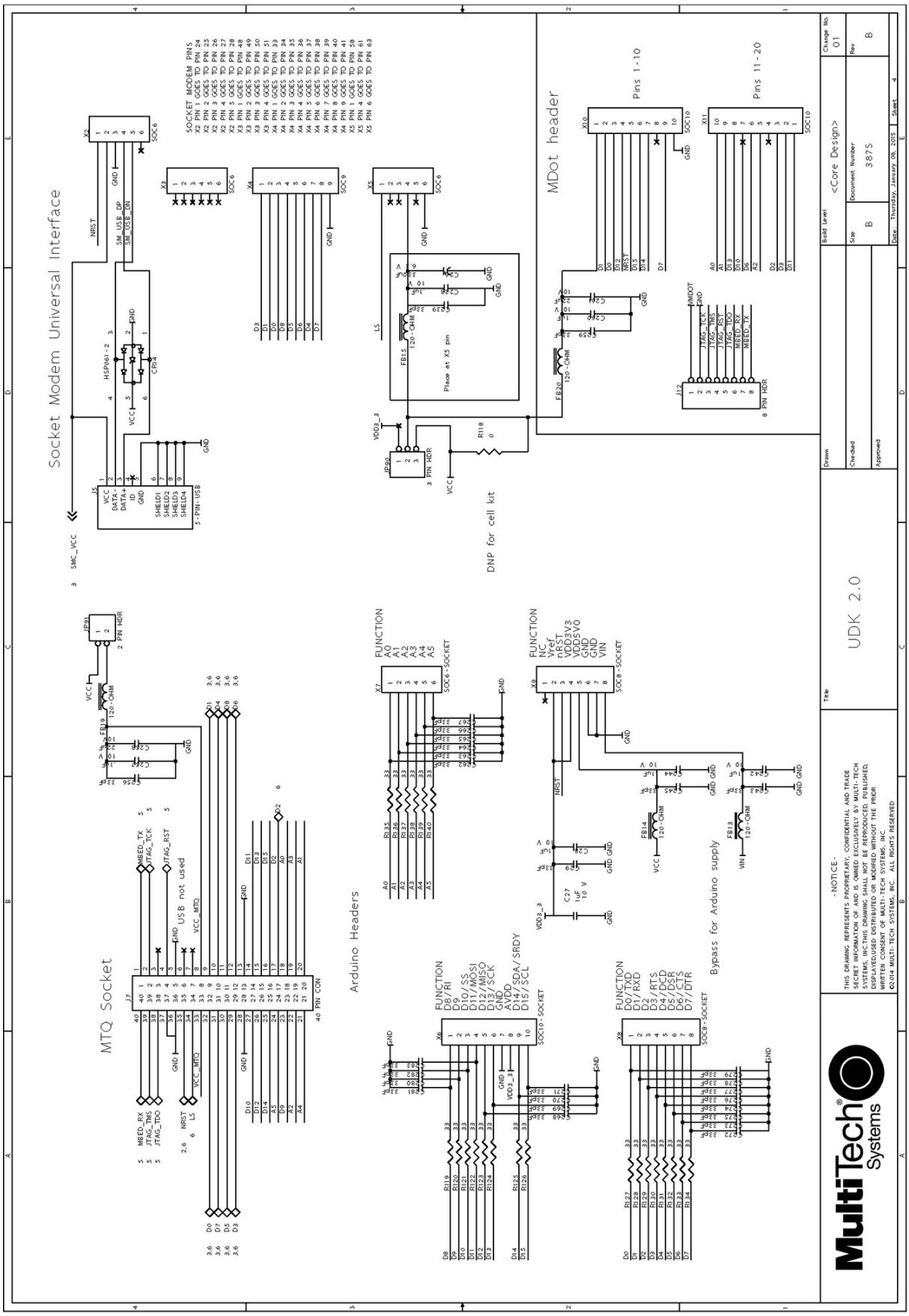
Socket Modem Universal Interface
MDot header
Pins 1-10
Pins 11-20
DNP for cell kit
Place at X5 pin
MTQ Socket
USB not used
Arduino Headers
Bypass for Arduino supply
UDK 2.0
MultiTech Systems
-NOTICE-
THIS DRAWING REPRESENTS PROPRIETARY, CONFIDENTIAL AND TRADE SECRET INFORMATION OF AND IS OWNED EXCLUSIVELY BY MULTI-TECH SYSTEMS, INC. NOT AUTHORIZED FOR REPRODUCTION OR PUBLISHED, DISPLAYED,USED DISTRIBUTED OR MODIFIED WITHOUT THE PRIOR WRITTEN CONSENT OF MULTI-TECH SYSTEMS, INC.
©2014 MULTI-TECH SYSTEMS, INC. ALL RIGHTS RESERVED

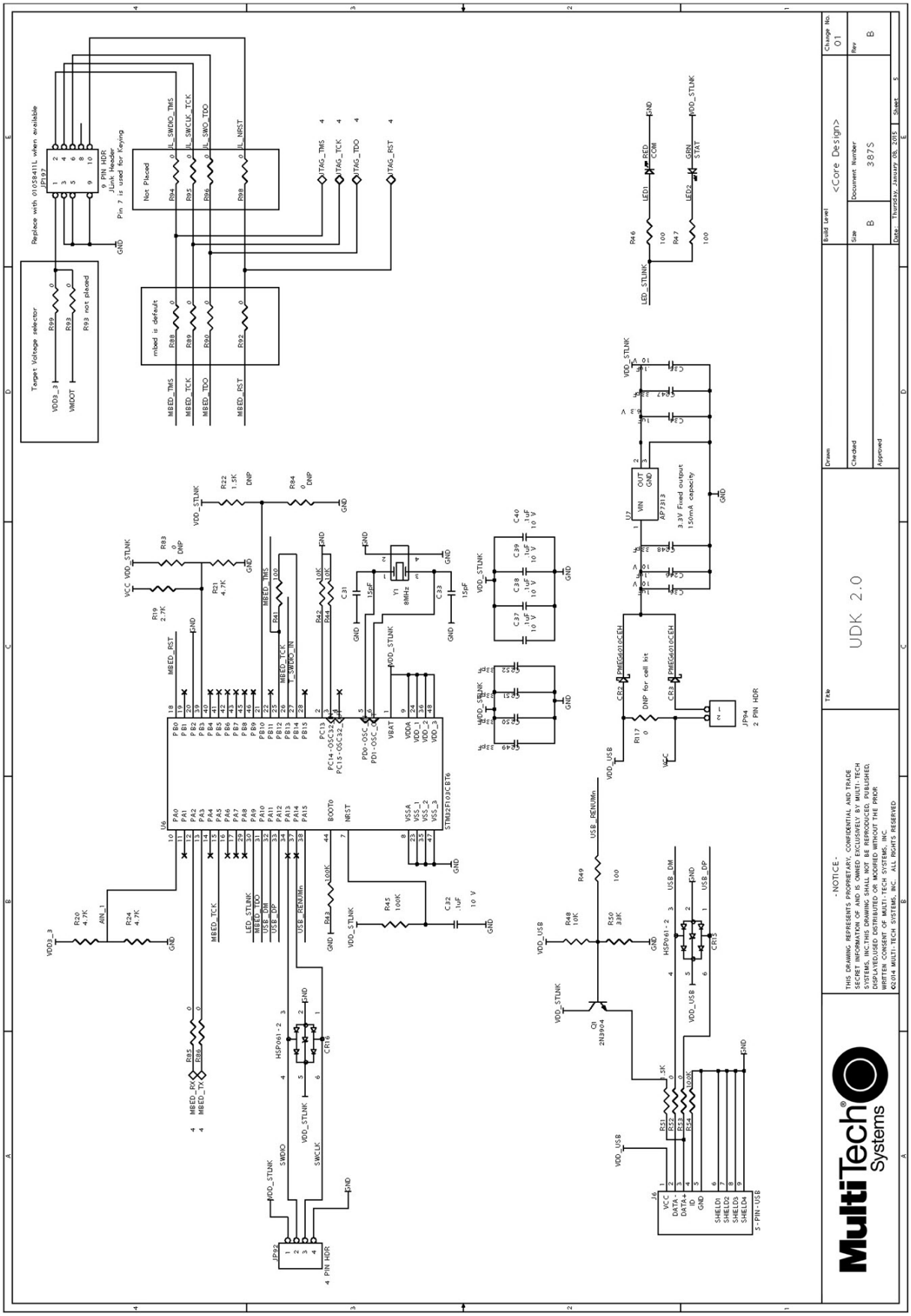
UDK 2.0
MultiTech Systems
- NOTICE -
THIS DRAWING REPRESENTS PROPRIETARY, CONFIDENTIAL AND TRADE SECRET INFORMATION OF AND IS OWNED EXCLUSIVELY BY MULTI-TECH SYSTEMS, INC.THIS DRAWING SHALL NOT BE REPRODUCED, PUBLISHED, DISCLOSED,DISTRIBUTED OR MODIFIED WITHOUT THE PRIOR WRITTEN CONSENT OF MULTI-TECH SYSTEMS, INC.
©2014 MULTI-TECH SYSTEMS, INC. ALL RIGHTS RESERVED
Target Voltage selector
Replace with 0105841IL when available
JP197
9 PIN HDR
JLink Header
Pin 7 is used for Keying
Not Placed
mbed is default
R93 not placed
JTAG_TMS
JTAG_TCK
JTAG_TDO
JTAG_RST
MBED_TMS
MBED_TCK
MBED_TDO
MBED_RST
JL_SWDIO_TMS
JL_SWCLK_TCK
JL_SWO_TDO
JL_NRST
VDD_STLINK
VCC VDD_STLINK
LED_STLINK
LED1
LED2
RED COM
GRN STAT
AP7313
3.3V Fixed output
150mA capacity
CR2 PMEG6010CEH
CR3 PMEG6010CEH
DNP for cell kit
JP94
2 PIN HDR
STM32F103CBT6
USB_RENUMn
USB_DM
USB_DP
HSPO61-2
2N3904
VDD_USB
SWDIO
SWCLK
4 PIN HDR
5-PIN-USB
VCC
DATA-
DATA+
ID
GND
SHIELD1
SHIELD2
SHIELD3
SHIELD4
Y1
8MHz
Build Level
<Core Design>
Change No.
01
Size
B
Document Number
3875
Rev
B
Date: Thursday, January 08, 2015
Sheet 5
Drawn
Checked
Approved
Title

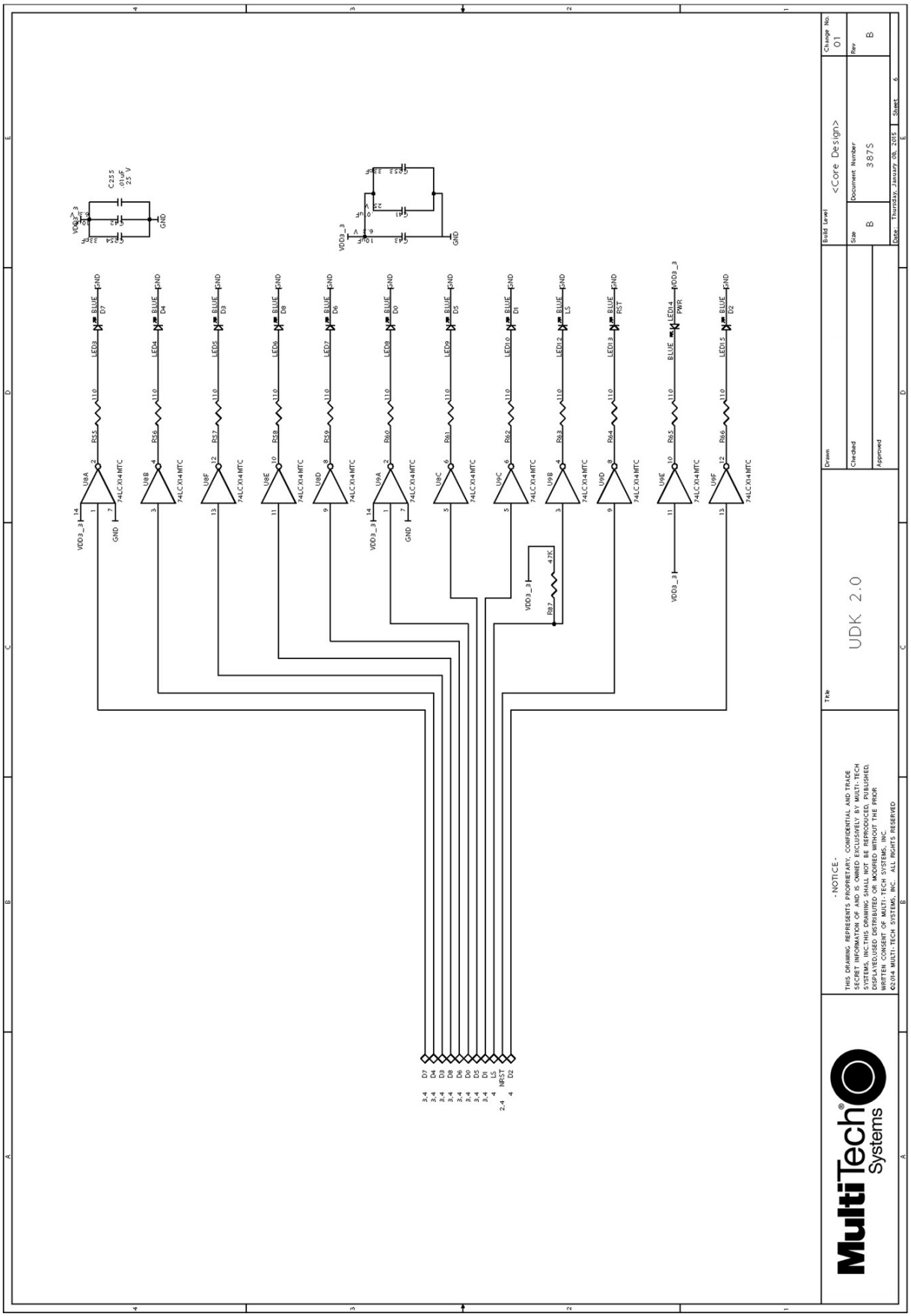
UDK 2.0
<Core Design>
387S
Build Level
Size
B
Document Number
Date: Thursday, January 08, 2015
Sheet 6
Change No.
01
Rev
B
Drawn
Checked
Approved
Title
- NOTICE -
THIS DRAWING REPRESENTS PROPRIETARY, CONFIDENTIAL AND TRADE SECRET INFORMATION OF AND IS OWNED EXCLUSIVELY BY MULTI-TECH SYSTEMS, INC.THIS DRAWING SHALL NOT BE REPRODUCED, PUBLISHED, DISPLAYED,USED DISTRIBUTED OR MODIFIED WITHOUT THE PRIOR WRITTEN CONSENT OF MULTI-TECH SYSTEMS, INC.
©2014 MULTI-TECH SYSTEMS, INC. ALL RIGHTS RESERVED
MultiTech Systems

Chapter 13 Micro Developer Kit

Micro Developer Kit

Designed specifically for mDot development, the Micro DK plugs directly into a USB port on your computer making it easy to use the developer kit for testing, programming, and evaluating your application.

Note: To work with the developer board, you need an X1P mDot model which includes a programming header.

Developer Kit Package Contents

Your Developer Kit (MTMDK-ST-MDOT) includes the following:

Developer Board	1 - MTMDK mDot Developer Board
Antenna	1 - 868-945 MHz LoRa Antenna
Customer Notices	This Quick Start

Update your developer board ST-LINK/V2 firmware through the mDot mbed page at

https://developer.mbed.org/platforms/MTS-mDot-F411/#general-technical-references

Firmware Updates

Before starting your project development, make sure you have the latest firmware for the Micro Developer Kit and mDot. Go to the mDot mbed page for MicroDK firmware. https://developer.mbed.org/platforms/MTS-mDot-F411/

Micro DK Mechanical Drawings

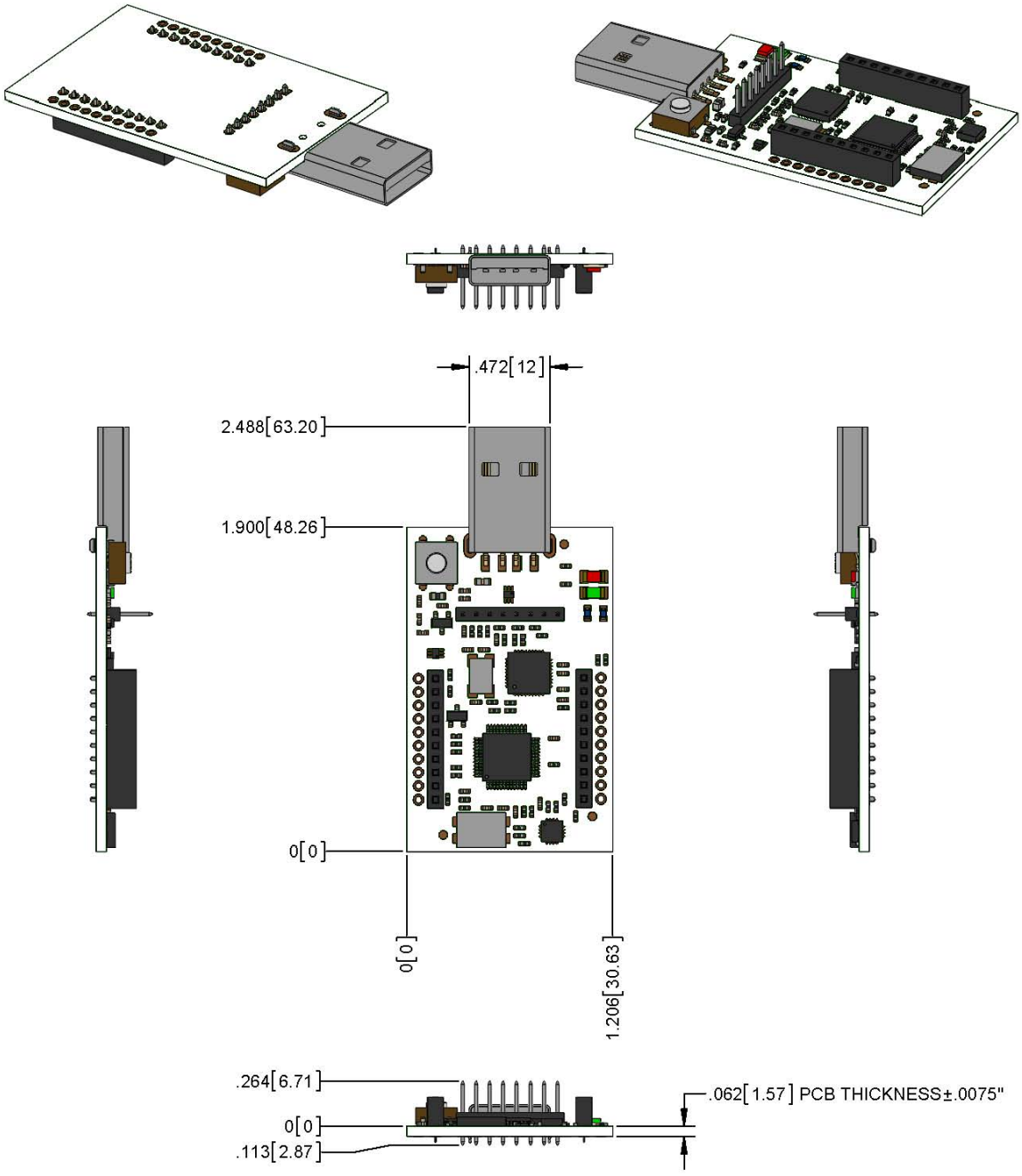

DIMENSIONS IN In [mm]

Micro Developer Board Components

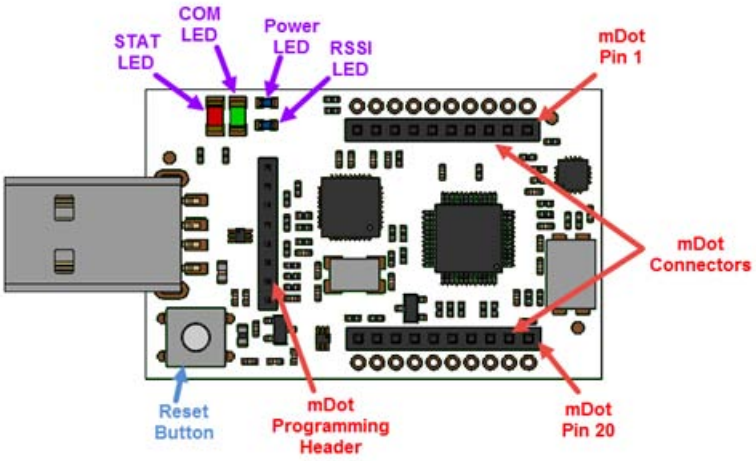

Note: The Reset Button resets the mDot processor.

LED	Description
STAT	LED1 Status, red light that blinks when device powers up.
COM	LED2 Communication, green light that shows when device is communicating.
PWR	LED3 Power, blue lights when the board has power.
RSSI	LED4 Received Signal Strength Indicator.

Installing an mDot on a Micro Developer Board

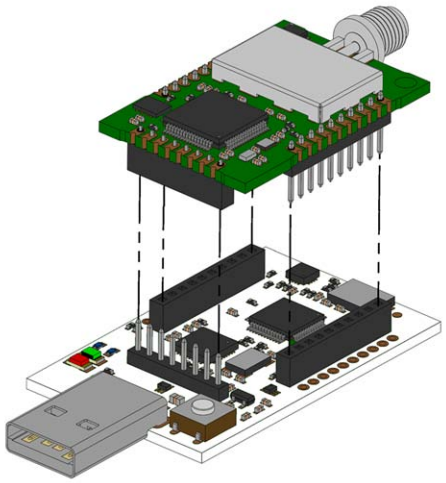

To install an mDot on the Micro Developer Board:

1. Align the mDot on the developer board as shown.
2. Gently press the mDot into the connectors.

Assembly Diagrams and Schematics

Assembly Diagrams

Top Assembly

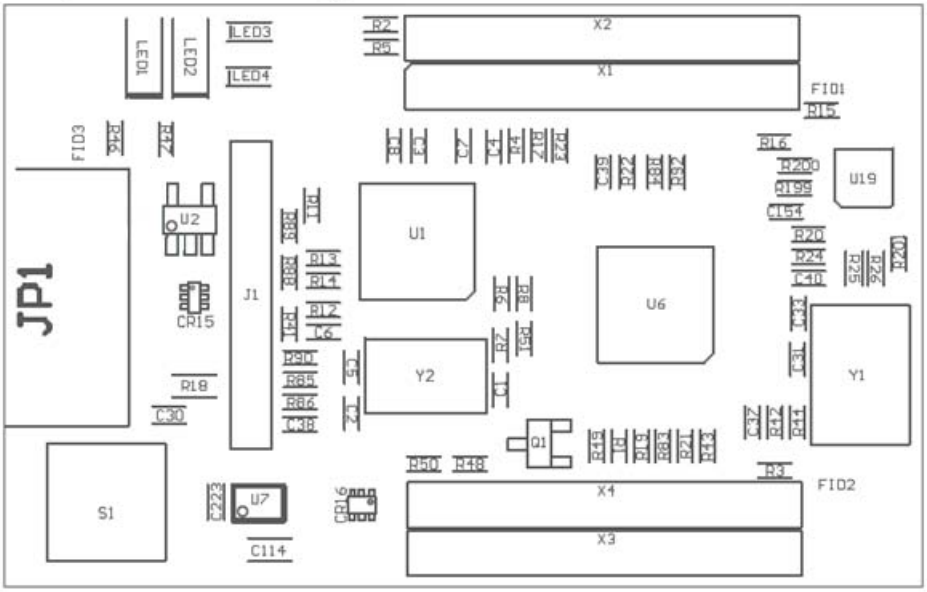

Bottom Assembly

Schematics

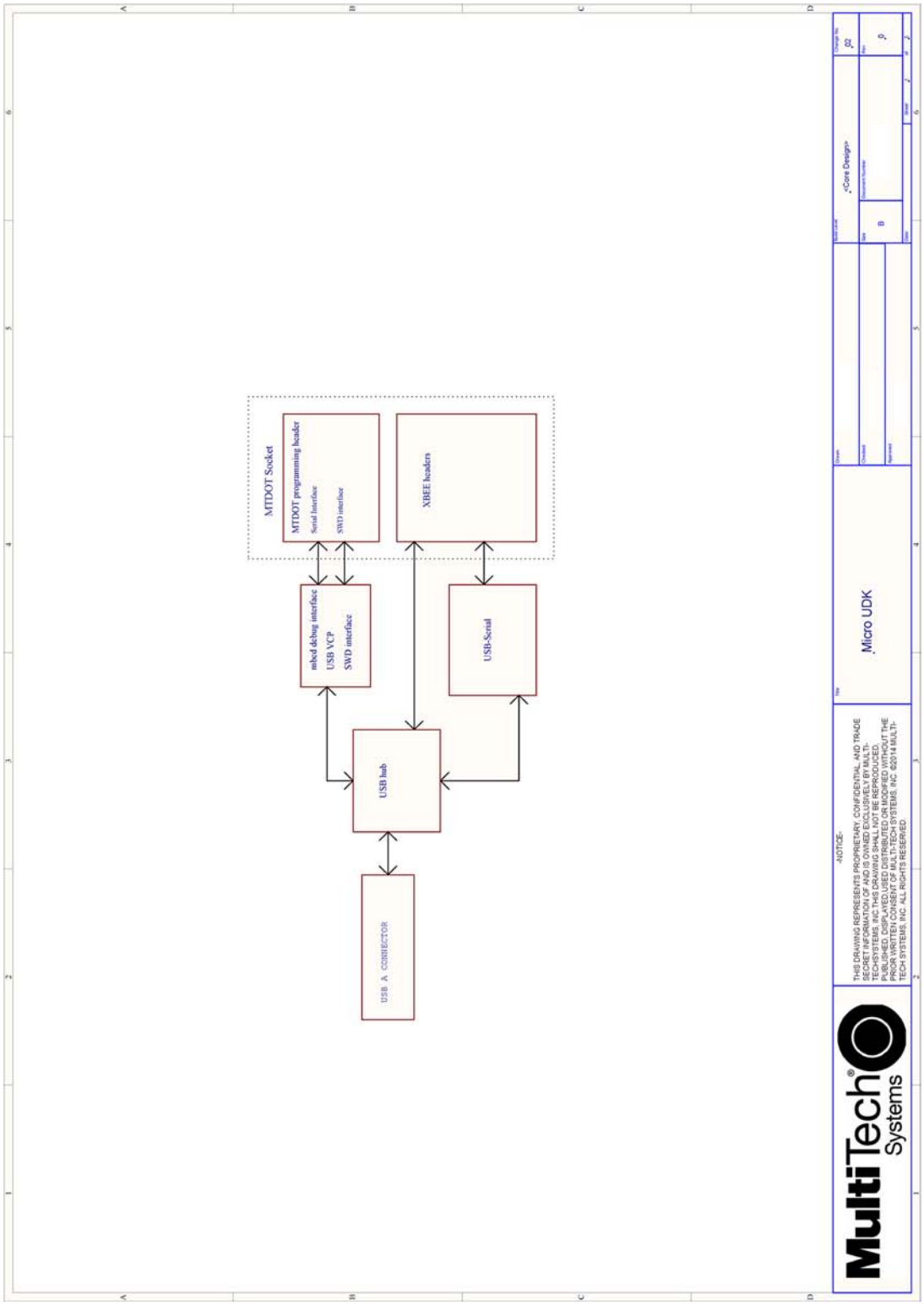
MTDOT Socket
MTDOT programming header
Serial Interface
SWD interface
XBEE headers
mbed debug interface
USB VCP
SWD interface
USB-Serial
USB hub
USB A CONNECTOR
Micro UDK
MultiTech Systems

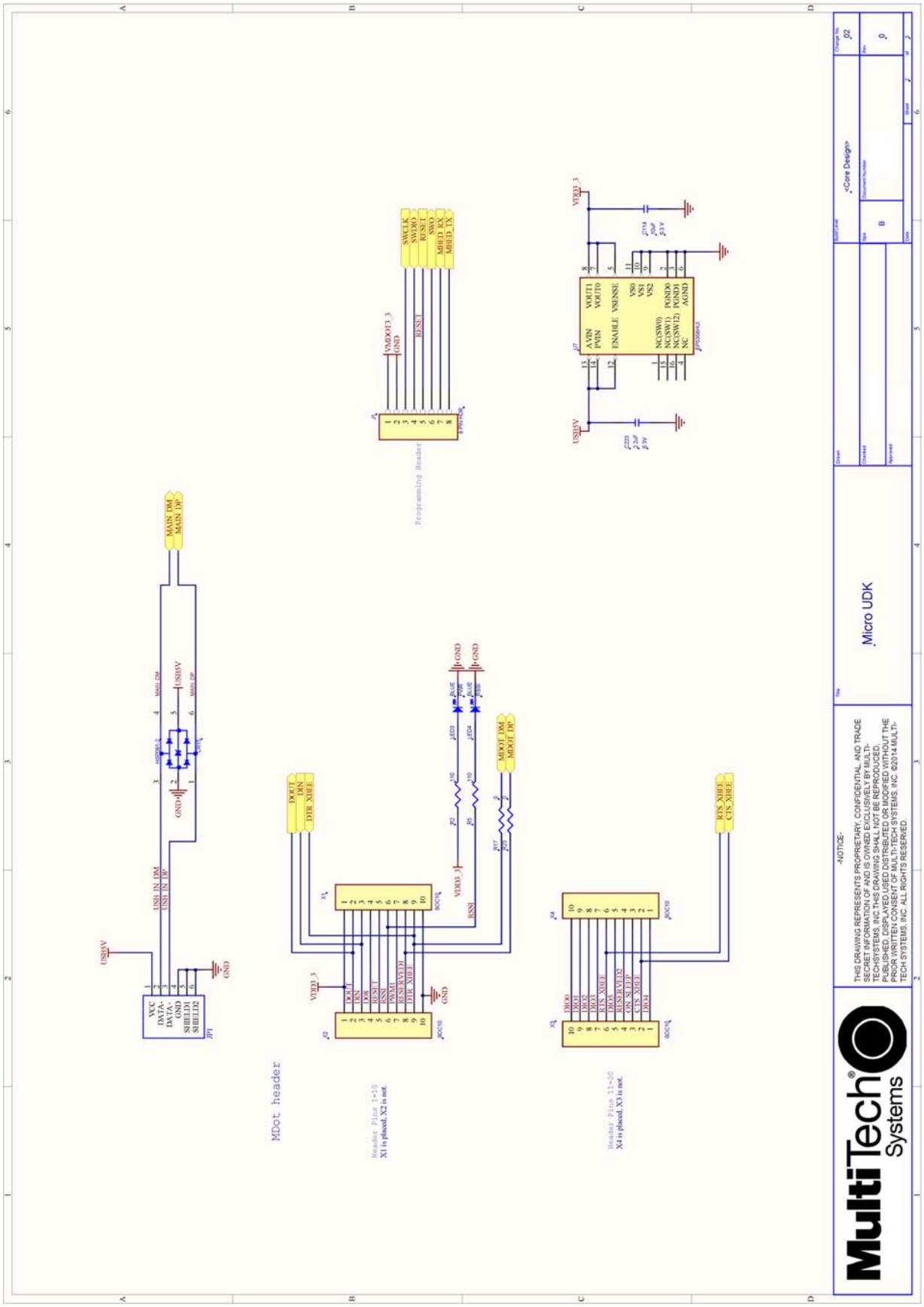
MDot header
Programming Header
Micro UDK
MultiTech Systems
-NOTICE-
THIS DRAWING REPRESENTS PROPRIETARY, CONFIDENTIAL, AND TRADE SECRET INFORMATION OF AND IS OWNED EXCLUSIVELY BY MULTI-TECH SYSTEMS, INC. THIS DRAWING SHALL NOT BE REPRODUCED, PUBLISHED, DISPLAYED, USED, DISTRIBUTED OR MODIFIED WITHOUT THE PRIOR WRITTEN CONSENT OF MULTI-TECH SYSTEMS, INC. ©2014 MULTI-TECH SYSTEMS, INC. ALL RIGHTS RESERVED.

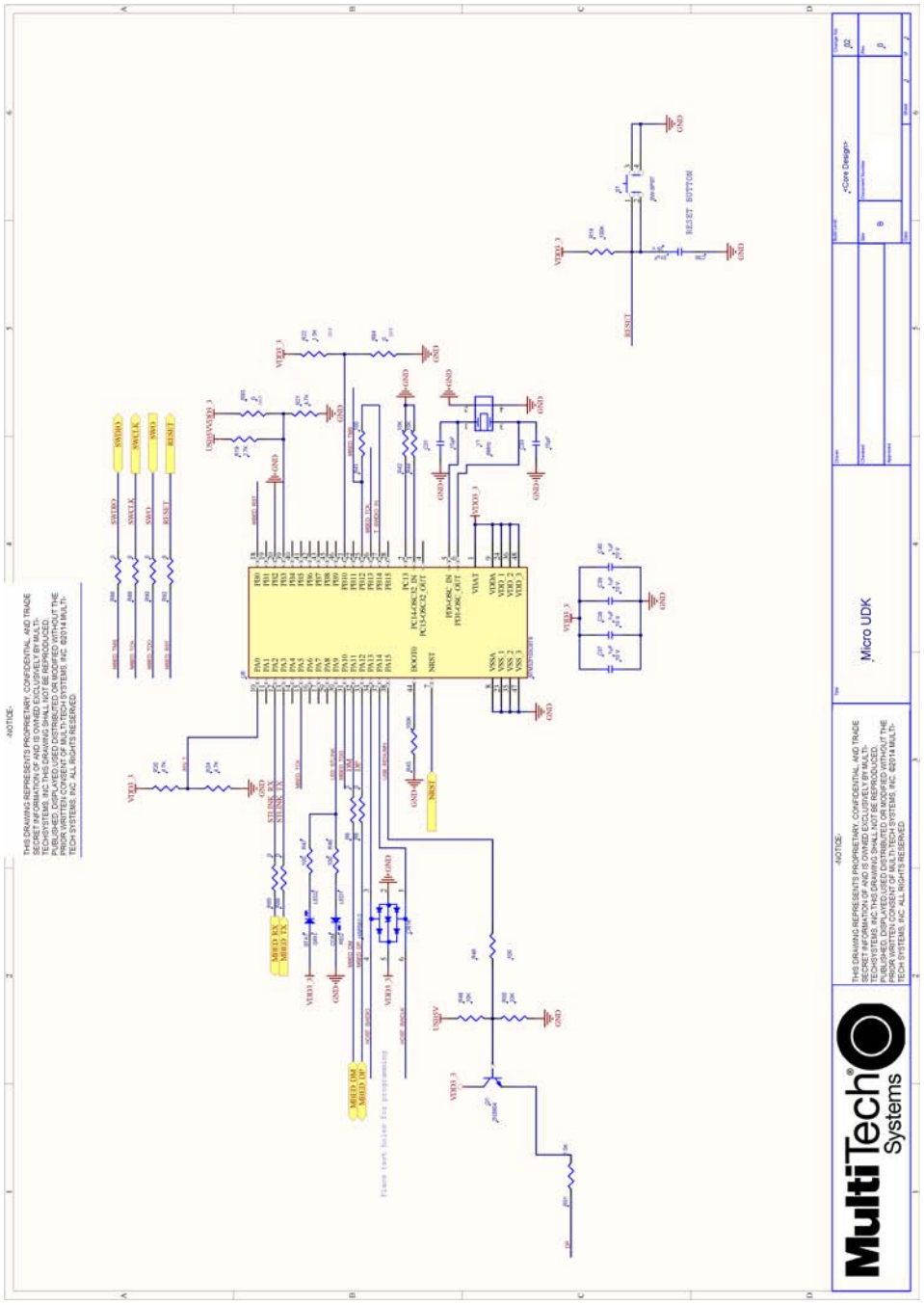
MultiTech Systems
Micro UDK
Core Design
RESET BUTTON
SWDIO
SWCLK
SWO
RESET
MBED DP
MBED DM
MBED TX
MBED RX
Place test holes for programming
NOTICE:
THIS DRAWING REPRESENTS PROPRIETARY, CONFIDENTIAL, AND TRADE SECRET INFORMATION OF AND IS OWNED EXCLUSIVELY BY MULTI-TECH SYSTEMS, INC. THIS DRAWING SHALL NOT BE REPRODUCED, PUBLISHED, DISPLAYED, USED, DISTRIBUTED, OR MODIFIED WITHOUT THE PRIOR WRITTEN CONSENT OF MULTI-TECH SYSTEMS, INC. ©2014 MULTI-TECH SYSTEMS, INC. ALL RIGHTS RESERVED

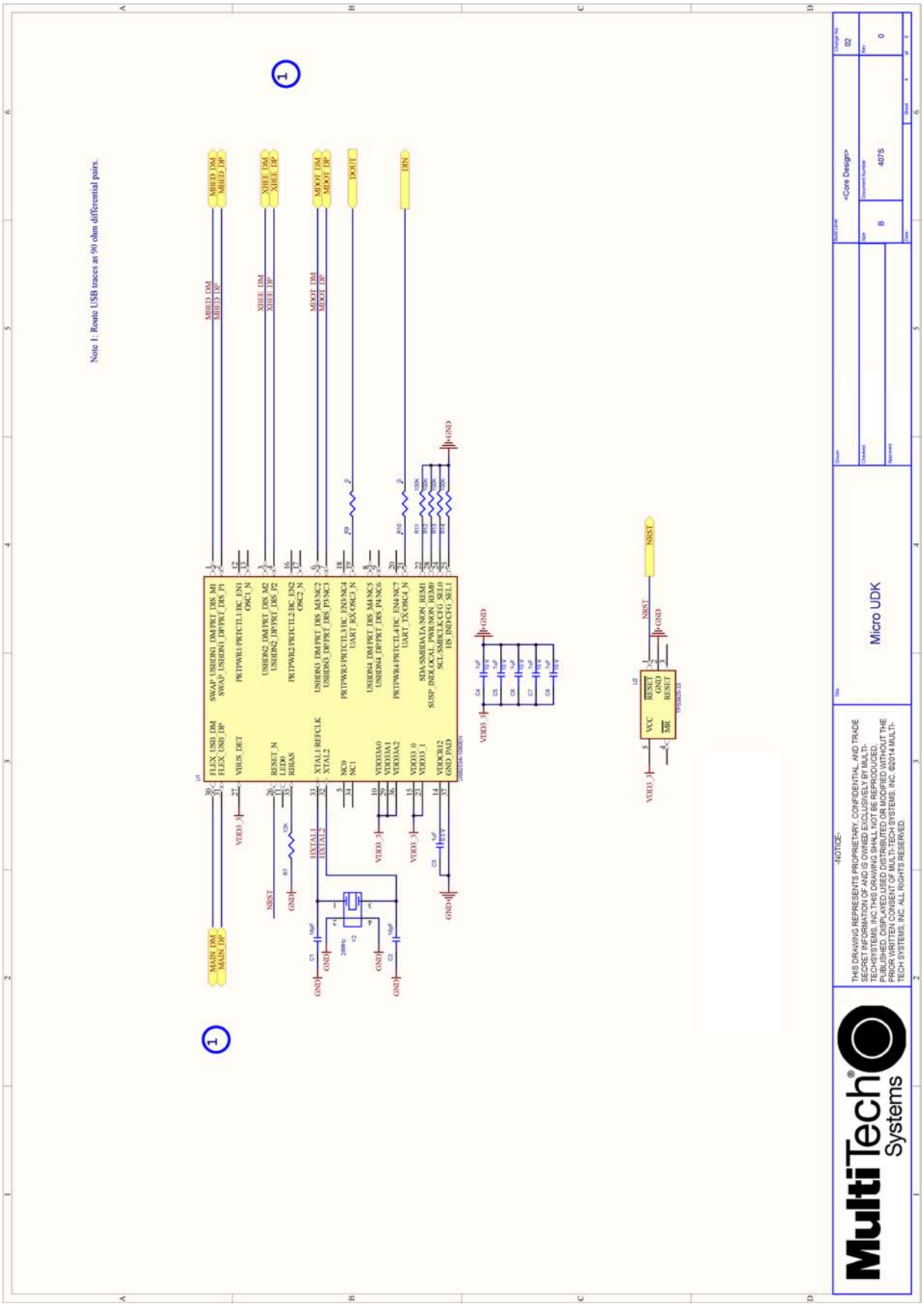
Note 1: Route USB traces as 90 ohm differential pairs.
Micro UDK
<Core Design>
MultiTech Systems

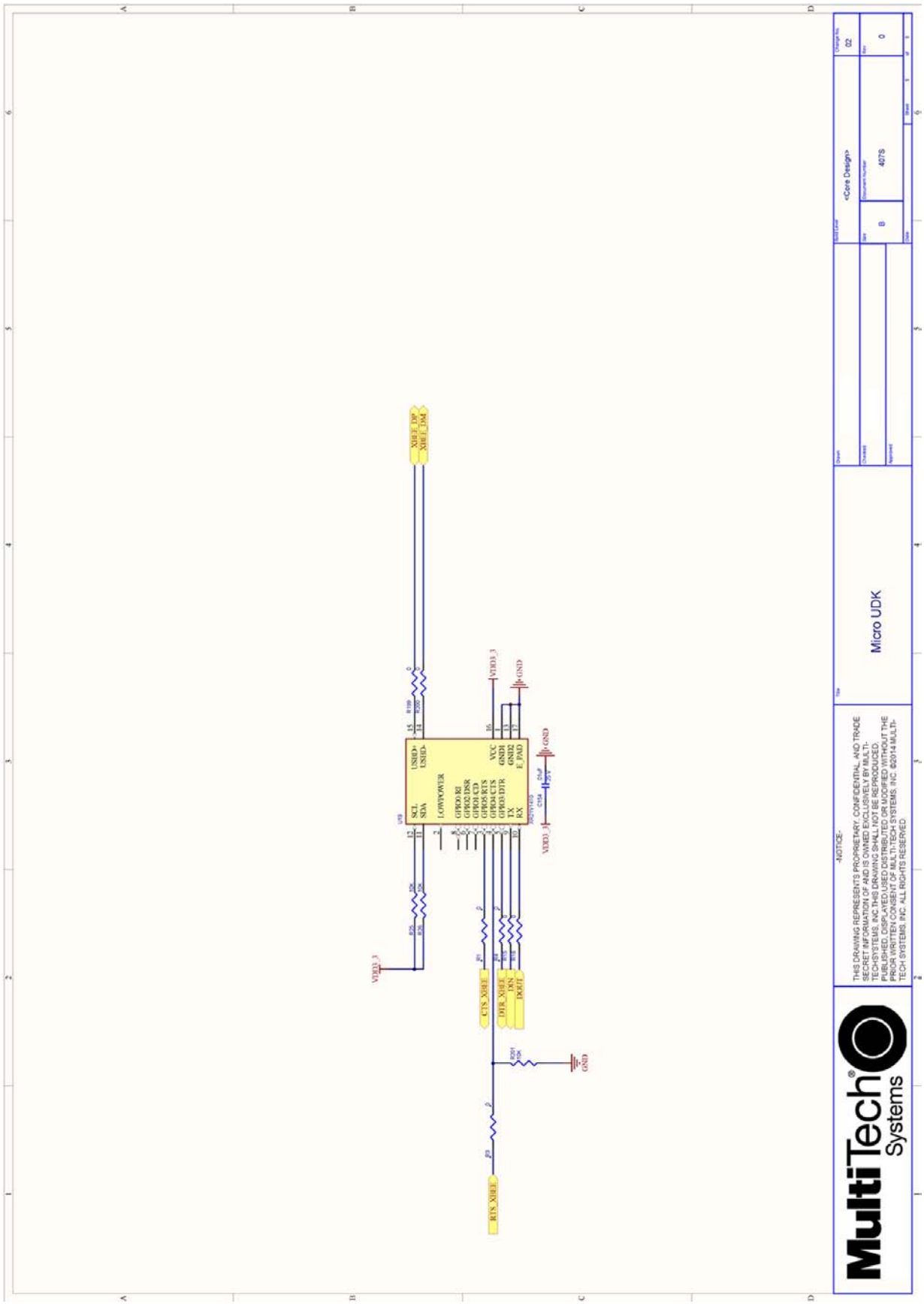
Micro UDK
MultiTech Systems
<Core Design>
407S
-NOTICE-
THIS DRAWING REPRESENTS PROPRIETARY, CONFIDENTIAL, AND TRADE SECRET INFORMATION OF AND IS OWNED EXCLUSIVELY BY MULTI-TECH SYSTEMS, INC. THIS DRAWING SHALL NOT BE REPRODUCED, PUBLISHED, DISPLAYED, USED, DISTRIBUTED OR MODIFIED WITHOUT THE PRIOR WRITTEN CONSENT OF MULTI-TECH SYSTEMS, INC. ©2014 MULTI-TECH SYSTEMS, INC. ALL RIGHTS RESERVED.

Chapter 14 Design Considerations

Noise Suppression Design

Adhere to engineering noise-suppression practices when designing a printed circuit board (PCB). Noise suppression is essential to the proper operation and performance of the modem and surrounding equipment.

Any OEM board design must consider both on-board and off-board generated noise that can affect digital signal processing. Both on-board and off-board generated noise that is coupled on-board can affect interface signal levels and quality. Noise in frequency ranges that affect modem performance is of particular concern.

On-board generated electromagnetic interference (EMI) noise that can be radiated or conducted off-board is equally important. This type of noise can affect the operation of surrounding equipment. Most local government agencies have certification requirements that must be met for use in specific environments.

Proper PC board layout (component placement, signal routing, trace thickness and geometry, and so on) component selection (composition, value, and tolerance), interface connections, and shielding are required for the board design to achieve desired modem performance and to attain EMI certification.

Other aspects of proper noise-suppression engineering practices are beyond the scope of this guide. Consult noise suppression techniques described in technical publications and journals, electronics and electrical engineering text books, and component supplier application notes.

PC Board Layout Guideline

In a 4-layer design, provide adequate ground plane covering the entire board. In 4-layer designs, power and ground are typically on the inner layers. Ensure that all power and ground traces are 0.05 inches wide.

The recommended hole size for the device pins is 0.036 in. +/-0.003 in. in diameter. Use spacers to hold the device vertically in place during the wave solder process.

Electromagnetic Interference

The following guidelines are offered specifically to help minimize EMI generation. Some of these guidelines are the same as, or similar to, the general guidelines. To minimize the contribution of device-based design to EMI, you must understand the major sources of EMI and how to reduce them to acceptable levels.

- Keep traces carrying high frequency signals as short as possible.
- Provide a good ground plane or grid. In some cases, a multilayer board may be required with full layers for ground and power distribution.
- Decouple power from ground with decoupling capacitors as close to the device's power pins as possible.
- Eliminate ground loops, which are unexpected current return paths to the power source and ground.
- Decouple the telephone line cables at the telephone line jacks. Typically, use a combination of series inductors, common mode chokes, and shunt capacitors. Methods to decouple telephone lines are similar to decoupling power lines; however, telephone line decoupling may be more difficult and deserves additional attention. A commonly used design aid is to place footprints for these components and populate as necessary during performance/EMI testing and certification.
- Decouple the power cord at the power cord interface with decoupling capacitors. Methods to decouple power lines are similar to decoupling telephone lines.

- Locate high frequency circuits in a separate area to minimize capacitive coupling to other circuits.
- Locate cables and connectors to avoid coupling from high frequency circuits.
- Lay out the highest frequency signal traces next to the ground grid.
- If using a multilayer board design, make no cuts in the ground or power planes and be sure the ground plane covers all traces.
- Minimize the number of through-hole connections on traces carrying high frequency signals.
- Avoid right angle turns on high frequency traces. Forty-five degree corners are good; however, radius turns are better.
- On 2-layer boards with no ground grid, provide a shadow ground trace on the opposite side of the board to traces carrying high frequency signals. This will be effective as a high frequency ground return if it is three times the width of the signal traces.
- Distribute high frequency signals continuously on a single trace rather than several traces radiating from one point.

Electrostatic Discharge Control

Handle all electronic devices with precautions to avoid damage due to the static charge accumulation.

See the ANSI/ESD Association Standard (ANSI/ESD S20.20-1999) – a document “for the Development of an Electrostatic Discharge Control for Protection of Electrical and Electronic Parts, Assemblies and Equipment.” This document covers ESD Control Program Administrative Requirements, ESD Training, ESD Control Program Plan Technical Requirements (grounding/bonding systems, personnel grooming, protected areas, packaging, marking, equipment, and handling), and Sensitivity Testing.

MultiTech strives to follow these recommendations. Input protection circuitry is incorporated in MultiTech devices to minimize the effect of static buildup. Take precautions to avoid exposure to electrostatic discharge during handling.

MultiTech uses and recommends that others use anti-static boxes that create a faraday cage (packaging designed to exclude electromagnetic fields). MultiTech recommends that you use our packaging when returning a product and when you ship your products to your customers.

USB Design

MultiTech recommends that you review Intel's High Speed USB Platform Design Guidelines for information about USB signal routing, impedance, and layer stacking. Also:

- Shield USB cables with twisted pairs (especially those containing D+/D-).
- Use a single 5V power supply for USB devices. See Power Draw for current (ampere) requirements.
- Route D+/D- together in parallel with the trace spacing needed to achieve 90 ohms differential impedance for the USB pair and to maintain a 20 mil space from the USB pair and all other signals.
- If power is provided externally, use a common ground between the carrier board and the device.

Chapter 15 AT Commands

MultiTech AT Command Set

These commands are available in firmware Version 0.1.3. Some commands are not available in older firmware versions. For firmware upgrade instructions and to download the latest firmware go to http://www.multitech.net/developer/software/mdot-software/mdot-firmware-upgrade/.

General Commands

Command	Description	Details
AT	Attention	Returns OK
ATI	Request ID	Shows firmware and library version information.
ATZ	Reset CPU	Reset the CPU.
ATE0/1	Enable/Disable echo mode	ATE0: disable, ATE1: enable.
ATV0/1	Enable/Disable verbose mode	ATV0: disable, ATV1: enable.
AT&F	Reset factory defaults	Reset current configuration to factory defaults.
AT&W	Save configuration	Save configuration to flash memory.
AT&V	Display status/setting	Displays current settings and status.
AT&S	Display stats	Displays statistics
AT&R	Reset stats	Resets statistics
AT+IPR	Set serial baud rate	Defaults to 115200.
AT+DIPR	Set debug serial baud rate	Defaults to 115200.
AT+SMODE	Start up mode	0: AT command mode, 1: Serial data mode. If this is set to 1(serial data mode), auto join needs to be enabled so that a join is performed on power up or reset. To exit serial data mode (after +SMODE has been set to 1) reset or power cycle the mDot and input “+++” immediately. There is a one second window to gather “+++”. That puts the device in command mode but leaves +SMODE=1 such that a subsequent reset starts it in serial mode again.
AT+LOG	Debug log level	Enable or disable debug logging, 0: off, 1: Fatal - 6: Trace

Network/Addressing Commands

Command	Description	Details
AT+FREQ	Frequency Band	Read frequency band 868 or 915. Read only.
AT+FSB	Frequency Sub-band	Set the frequency sub-band for US 915. 0:ALL, 1-8.

Command	Description	Details
AT+PN	Public Network	Enable/disable public network mode. 0: off, 1: on.
AT+DI	Device ID	Device EUI (unique, set at factory), 8 bytes. Read only.
AT+NA	Network Address	Network address (devAddr in LoraMac), 4 bytes.
AT+NSK	Network Session Key	Network session encryption key, 16 bytes.
AT+DSK	Data Session Key	Data session encryption key (App session keyin LoraMac), 16 bytes.
AT+NK	Network Key	Configured network key/passphrase (App Key in LoraMac) ## AT+NK=0,hex AT+NK=1,passphrase (Net key = cmac(passphrase)). 16 bytes.
AT+NI	Network ID	Configured Network EUI/Name (App EUI in LoraMac). AT+NI=0,hex AT+NI=1,network_name (Net ID = crc64(network_name), 8 bytes.
AT+JOIN	Join Network	Join network (acquire network address and session keys).
AT+JR	Join Retries	Number of times to retry joining the network in an attempt (0 - 255).
AT+JBO	Join Byte Order	Send EUIs in join request with configured byte ordering.
AT+NJM	Network Join Mode	0: Manual configuration, 1: OTA Network Join, 2: Auto OTA Network Join on start up. Default: 1. Note that 0 for manual configuration is part of LoRaWAN compliance.
AT+NJS	Network Join Status	Displays last known state. 0: Not joined, 1: Joined.
AT+NLC	Network Link Check	Perform network link check, OK or ERROR.
AT+LCC	Link Check Count	Set number of packets between each link and check if ACKs are disabled.
AT+LCT	Link Check Threshold	Set threshold for number of link check or ACK failures to tolerate. 0: off, N: number of failures.
AT+ENC	AES Encryption	Enable/disable AES encryption. 0: off, 1: on.
AT+RSSI	Signal Strength	Displays last received packet's signal strength.
AT+SNR	Signal To Noise Ratio	Display signal to noise ratio received packets last, minimum, maximum,average.
AT+DP	Data Pending	Indicator of data in queue on server.
AT+PING	Send Ping	Sends ping, displays RSSI and SNR from gateway on pong.

Radio Configuration

Command	Description	Details
AT+TXDR	Set Tx data rate	Set the Tx spread factor for all channels, 7-10.
AT+TXP	Set Tx Power	Set the Tx power for all channels.
AT+TXF	Tx Frequency	Set Tx frequency.

Command	Description	Details
AT+TXCH	Set Tx Channel	List channels for current sub-band. 0 = 902.7, 1 = 902.9, etc.
AT+TOA	Time On Air	Get packet transmit time in milliseconds with current data rate.
AT+TXI	Set Tx inverted	Set Tx signal inverted. Default: off.
AT+TXW	Tx Wait	Enable/disable waiting for rx windows to expire after send. 0: off, 1: on.
AT+RXDR	Set Rx Data Rate	Set the Rx spread factor for all channels, 7-10.
AT+RXF	Rx Frequency	Set the Rx frequency for +RECV,+RECVC.
AT+RXI	Set Rx inverted	Set Rx signal inverted. Default :on
AT+FEC	Set Error Correction	Configure Forward Error Correction. 1 to 4.
AT+CRC	Set CRC Check On/Off	Enable/disable CRC checking received packets. 0: off, 1: on.
AT+ADR	Adaptive Data Rate	Enable/disable Adaptive Data Rate. 0: off, 1: on.

Send/Receive

Command	Description	Details
AT+ACK	Require Send ACK	Enable to require send acknowledgment. 0: off, N: number of retries until ACK received.
AT+SEND	Send Once	Sends supplied packet data one time and returns response.
AT+SENDB	Send Binary	Sends supplied binary (hex) packet data one time and returns response.
AT+SENDH	Send Once High BW	Sends supplied packet data one time and returns response using High Bandwidth channel. Max: 240 bytes.
AT+SENDI	Send Interval	Sends supplied packet data on interval (escape sequence: +++).
AT+RECV	Receive Once	Display last packet received.
AT+RECVC	Receive Continuous	Continuously receive and display packets (escape sequence: +++).
AT+TXN	Tx Next	Get time until next free channel in milliseconds
AT+TOA	Time on Air	Get time in ms of packet tx with current data rate
AT+RXO	Rx Output	Set the Rx output type. 0:hexadecimal, 1: raw.

Sleep/Serial Data Mode Options

Command	Description	Details
AT+SD	Enter serial data mode	Reads serial data and sends LoRa packets (escape sequence: +++).

Command	Description	Details
AT+SLEEP	Sleep Mode	Enter sleep mode, wake on INTERVAL or INTERRUPT. The mDot will wake when the wake interval expires. Must issue AT+SLEEP to re-enter sleep mode.
AT+WM	Wake Mode	Wake up mode; Interrupt uses DIO7 as wake up pin; 0: INTERRUPT, 1: INTERVAL.
AT+WI	Wake Interval	Wake up interval (seconds).
AT+WD	Wake Delay	Maximum time to wait for data on serial port (milliseconds).
AT+WTO	Wake Timeout	Continue reading serial data until timeout (milliseconds).

Index

schematics
Micro Developer Board 57

A

antenna 25
connecting 46
Arduino Shield 45
assembly diagrams
Micro Developer Board 57
AT commands
MultiTech 65

B

baud rate 23
block diagram 48
board components 42
Micro Developer Board 56
build options 9

C

cable 46
certification
FCC 30
Industry Canada 31
certifications 16
Chinese hazardous substances
Chinese version 36
English version 35
Class B 29
Industry Canada 30
Conduit 7
connectors 42

D

data bits 23
dc characteristics 20
device
maintenance 28
documentation 7

E

electromagnetic interference 63
electrostatic discharge 64
EMI 63
ESD 64
EUI 8

F

FCC
grant notes 26
FCC certification 30
FCC Notice
Class B 29
flow control 23

G

ground plane 63

H

handling precautions due to ESD 64
hazardous substances 34
host labeling 26

I

identifier 8
IMEI location 37
Industry Canada 31
Class B 30
install mDot 44
Micro Developer Board 56
interférence des radiofréquences 27

K

KDB 447498 Section 8 26

L

labeling
host 26
labels 37
LED indicators 43

LoRa
range 23

M

maintenance 28
mbed 7
mechanical drawings 10 11 12 13 14 15
Micro Developer Board....55
MTAC-LORA....7
MTCDT....7
MultiConnect 7

N

networking 8
noise suppression....63

P

packing list 38 54
parity 23
PC board layout....63
pin information 20
pinout notes....23
power draw....19

R

radio frequency interference....27
range 23
receive sensitivity....16
related products....7
RoHS....34
RSMA to U.FL cable....46

S

safety
RF interference 27
safety standards....63
schematics....49
serial settings 23
SMA to U.FL....46
specifications....16
static....27
STmicro processor....7
stop bits....23
sécurité
interférences RF....27

T

trace antenna....25
transmission....16

U

U.FL 46
U.FL antenna 25
USB
design consideration....64
user responsibility....28