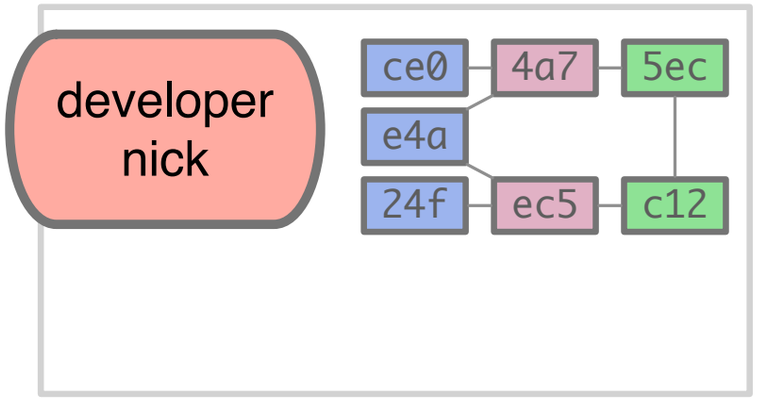
developer nick
ce0
4a7
5ec
e4a
24f
ec5
c12

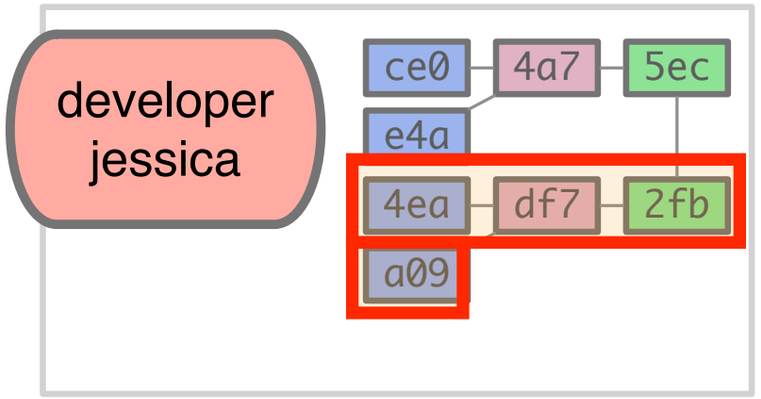
developer jessica
ce0
4a7
5ec
e4a
4ea
df7
2fb
a09

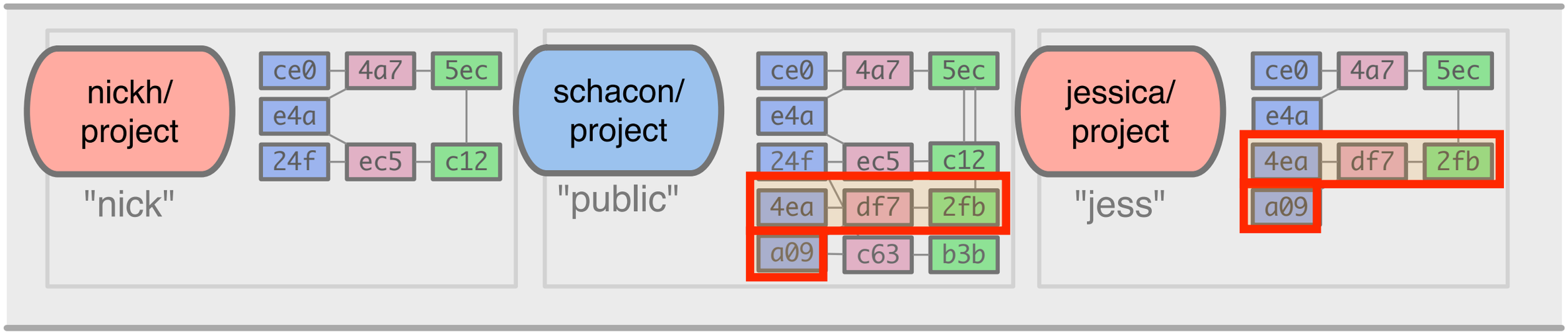
nickh/ project
"nick"
ce0
4a7
5ec
e4a
24f
ec5
c12
schacon/ project
"public"
ce0
4a7
5ec
e4a
24f
ec5
c12
4ea
df7
2fb
a09
c63
b3b
jessica/ project
"jess"
ce0
4a7
5ec
e4a
4ea
df7
2fb
a09

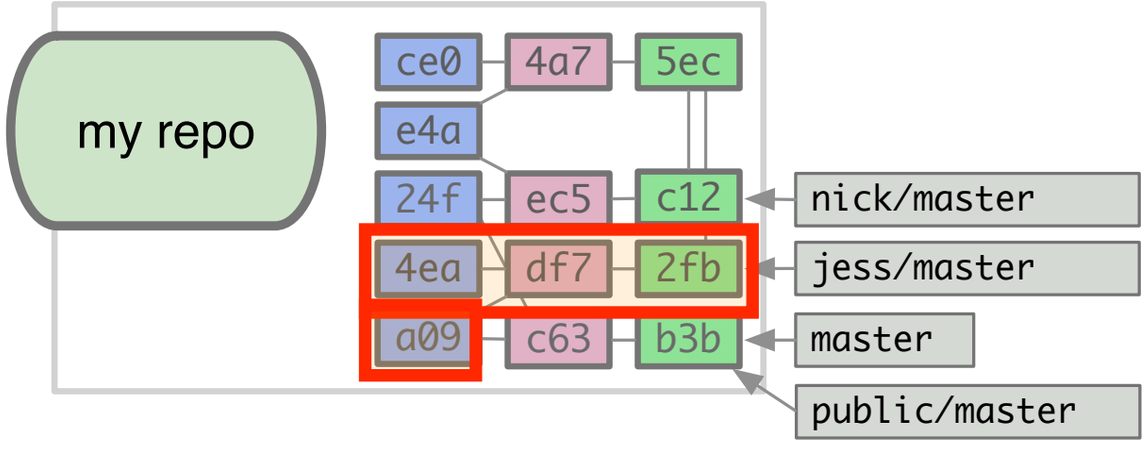
my repo
ce0
4a7
5ec
e4a
24f
ec5
c12
4ea
df7
2fb
a09
c63
b3b
nick/master
jess/master
master
public/master