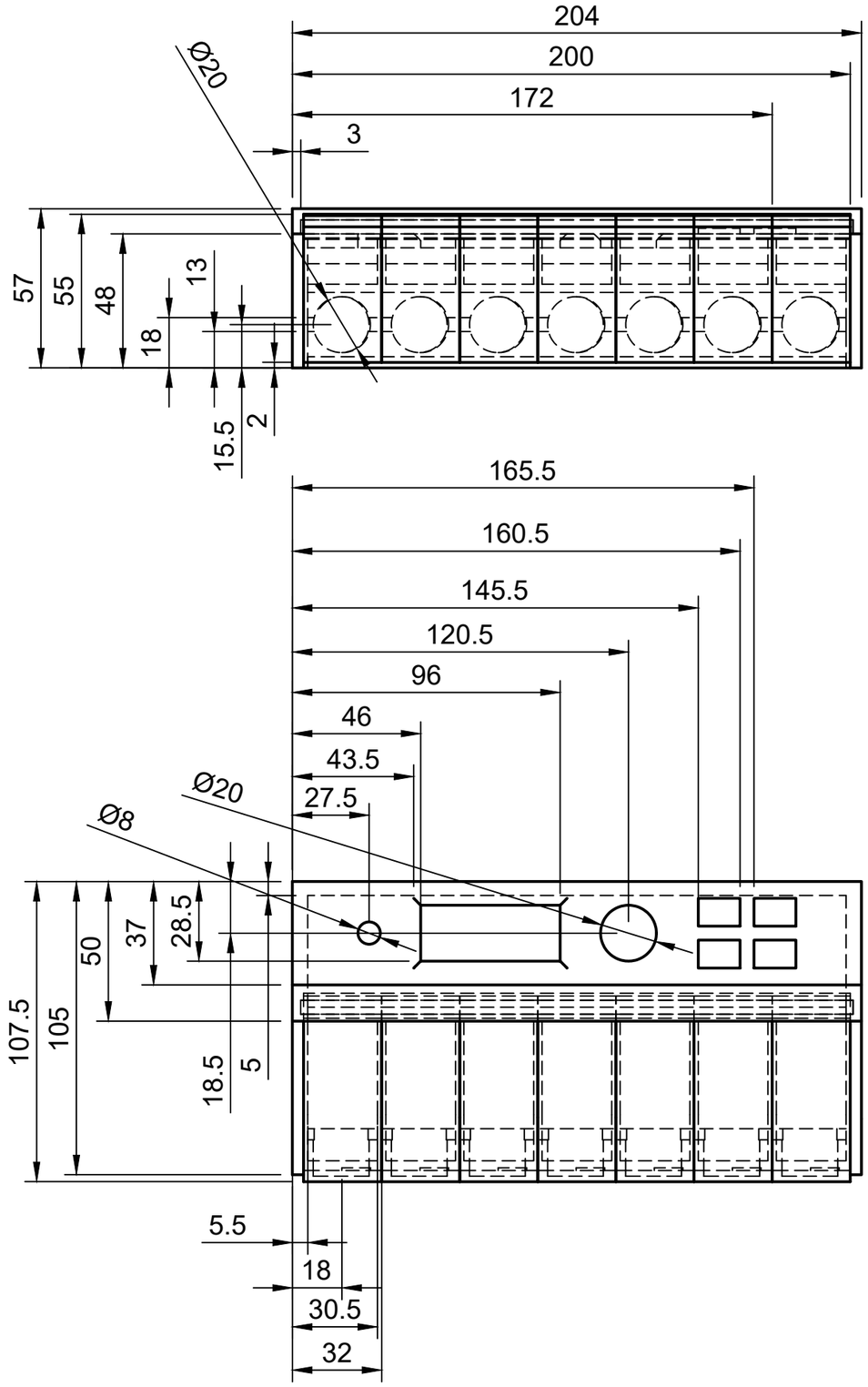

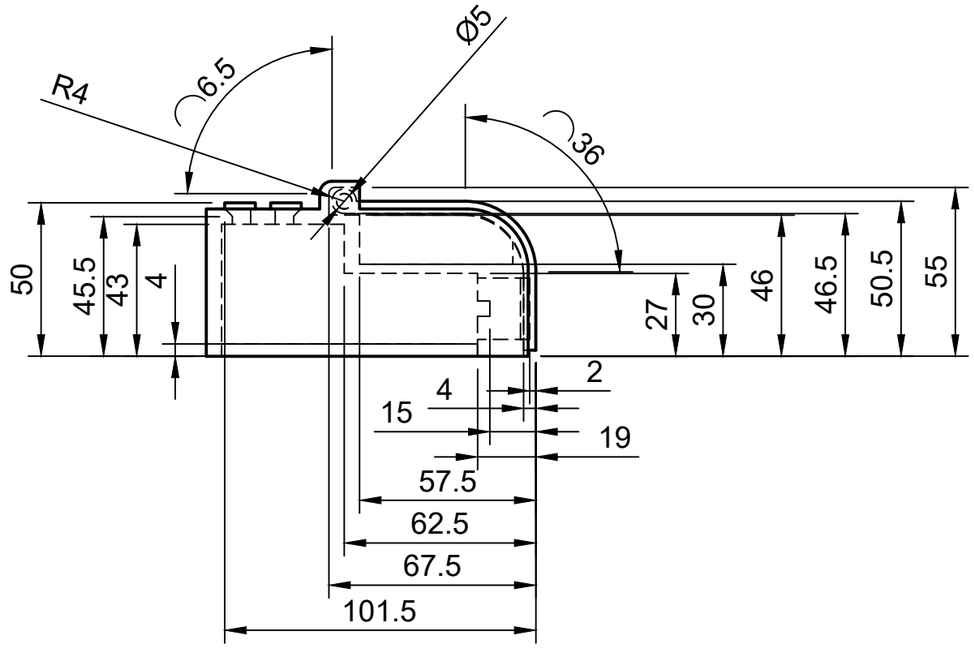

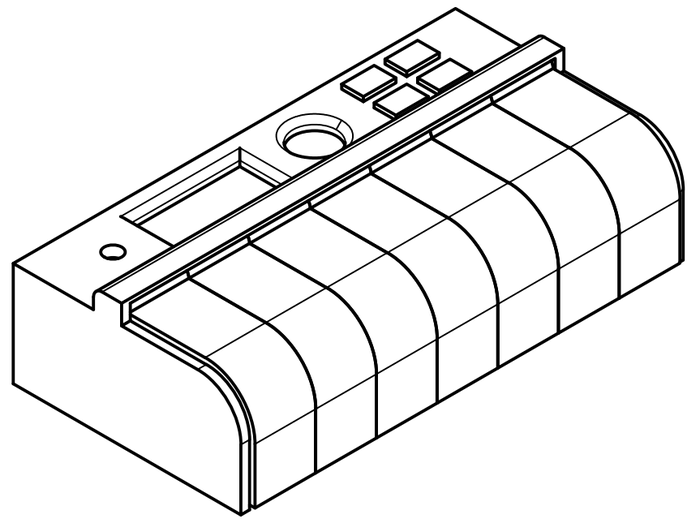

Dept.	Technical reference	Created by Isabel Hammarström 2023-09-21	Approved by	
Scale 1:2		Document type	Document status	
		Title Digital Dosett	DWG No.	
			Rev. / Date of issue	Sheet 1/1