Lab 1: Basic operational amplifier circuits
Due Date: Week of Sep. 15

In this lab exercise, we look at a variety of op-amp circuits. Note that this is a two-period lab.

Prior to Lab

1. If it has been a while since you last used the lab equipment, it would be a good idea to stop by the lab or TLA for a half hour to review the operation of multi-meters, oscilloscopes, and voltage supplies.
2. Look over the data sheets for the 324 and 660 op-amps. Even though they are different parts, they have identical pin connections, making it easy to swap them. Each package has four op-amps, and you can use any of them when building the circuits for this lab. The 324 is an early design – not too different from the original 741 – but is still a useful general-purpose op amp. The 660 is a more modern design with better specifications in some regards. However, in many simple applications, the 324 would serve just as well as the 660. Both chips can be operated off a single supply, which is useful in some applications. In this lab, we will use dual supplies for all the exercises.

   Suggestion: Since we will use the op amps frequently in EE 230, you might want to make a small copy of the pin-outs for each and tape them to the lid of your parts box.
3. Calculate the expected properties for each circuit. The calculations for each circuit are described in the lab description.
4. Build the first circuit or two on your breadboard.
5. Get your lab report set up so that results are easy to enter during lab.
6. Make sure that you have a flash drive so that you can record oscilloscope traces to include in the report.

A. Non-inverting amplifier

The non-inverting amplifier circuit shown below uses a 324 amplifier with ±15-V power supplies. The voltage signal v_{sine} is the function generator, set to a sinusoid with frequency of 1000 Hz and amplitude of 1.0 V_{RMS}. The potentiometer works as a voltage divider to reduce the sinusoidal voltage before going into the input of the amplifier – essentially a volume control. Initially, set the potentiometer in the middle of its range.

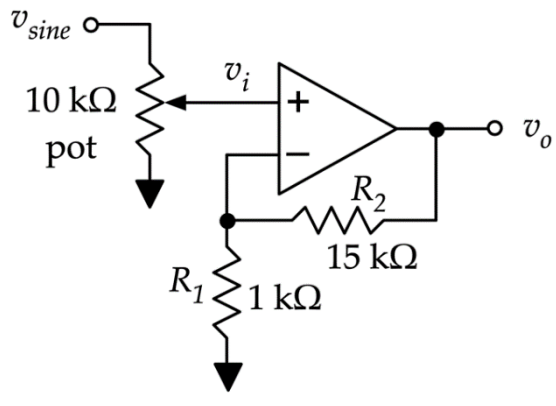

Figure 1.

- *Calculate* the expected gain, $G = v_o/v_i$ for the amp.
- *Build* the circuit.
- *Observe* the input and output voltages (v_i and v_o) together on the oscilloscope. Adjust the input potentiometer so that the output is not distorted at all (i.e. not clipped). Save a good trace on the flash drive to include in your report.
- *Measure* the gain by measuring the output voltage and input voltage with the multimeter and calculating the ratio. (Note: The input to the amplifier is v_i, not v_{sine}.)
- Adjust the potentiometer so that the output is clearly clipped. Save a copy of the oscilloscope trace.
- Adjust potentiometer again so that the output is at its maximum value without clipping. Use the multi-meter to measure this maximum, undistorted output voltage.
- (Optional) For fun, use the 3.5mm converter wires (available in the lab) to connect one side of your headphones (or earbuds) to the output of the amp. Adjust the potentiometer so that the volume is low initially. Then listen to the sinusoidal output in your earbud. Listen to the pure sinusoidal tones as you adjust the frequency and volume. (Pure tones are not very pleasant.) Increase the volume until clipping occurs and note how the sounds changes. Important: Be careful when connecting the earbuds. If you accidentally connect the earphones to one of the power supplies, you will probably burn out the tiny speaker coil in the earphone. It is good practice to use the multimeter to check for large DC voltages at the end of the jack *before* plugging in your headphones.

B. Observing the transfer characteristic

- Using the circuit of Fig. 1, attach channel 1 of the oscilloscope to the non-inverting terminal of the op-amp and channel 2 to the output. Observe both traces together on the oscilloscope and adjust the potentiometer so that the output sinusoid is not distorted.
- Put the oscilloscope into *X-Y mode*, which changes the to a plot of the voltage of channel 2 versus the voltage of channel 1. This is the transfer characteristic of the circuit. In this case, the characteristic is a simple, straight line with a slope of 16.
- Adjust the channel voltage settings so the slope is easily seen. (Not too steep, not too shallow.) Save a trace for the report.
- Now, adjust the potentiometer so that the output clips. The clipping is clearly evident on the characteristic. Save a trace of the clipped output for the report.

C. Unity-gain buffer

Wire up a potentiometer in a simple voltage divider configuration, as shown in Fig. 2(a).

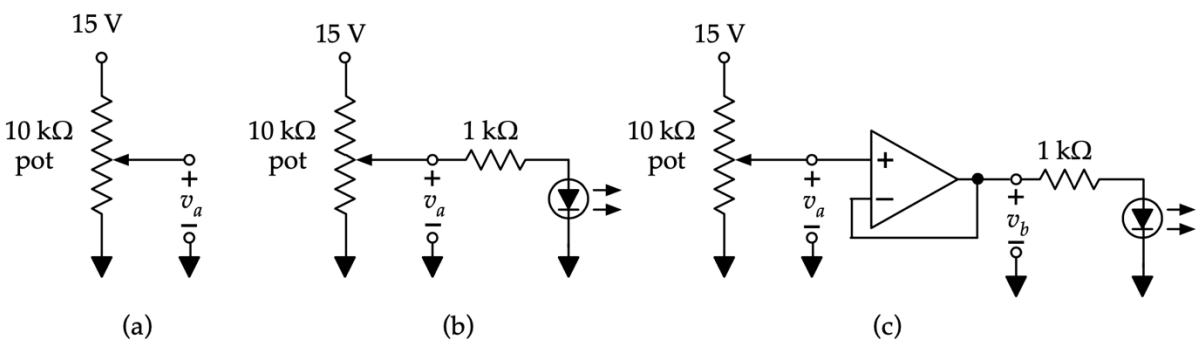

Figure 2.

- Measure the voltage v_a when the wiper is set at 25%, 50%, and 75% of the range. (The setting is obviously approximate — set it as close to the three positions as possible.) Confirm for yourself that the values make sense.
- Now attach a diode and a 1-kΩ current-limiting resistor as shown in Fig. 2(b). Any diode from your kit is OK, but for fun, you might consider using one of the LEDs. Measure v_a for the same three potentiometer settings. *Calculate* the expected values for v_a with the diode included. (Use 1 V for the turn-on voltage of diode. The calculations will probably not be very close due to the uncertainty of the diode voltage and the potentiometer settings.)
- Now insert a unity-gain buffer between the potentiometer and the LED/resistor pair. Use the LMC 660 op amp with the positive supply terminal at 15 V and the "negative" supply terminal connect to ground. Measure v_b–if should be equal to v_a–for the same three potentiometer settings. The benefit of the buffer should be obvious.

D. Inverting amplifier

The inverting amplifier circuit shown below uses an LMC660 op amp with ±8-V power supplies. The input voltage signal v_i is a sinusoid with frequency of 1000 Hz and amplitude of 0.2 V_{RMS}. Note that the potentiometer in the feedback loop makes this a *variable-gain* amplifier. Before plugging the potentiometer into the circuit, use the ohmmeter to set the value at 50 kΩ (halfway).

Figure 3.

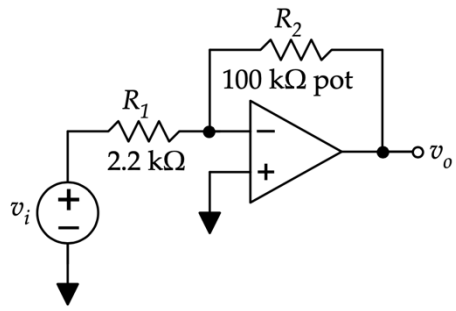

- Calculate the expected gain, $G = v_o/v_i$ for the amp. Assume that R_2 = 50 kΩ.
- Build the circuit.
- Observe the input and output voltages (v_i and v_o) together on the oscilloscope. If needed, adjust the potentiometer so that the output is not distorted. Save a good trace on the flash drive to include in your report.
- Measure the *magnitude* of the gain by measuring the output voltage and input voltage with the multimeter and calculating the ratio. (Recall that when using the AC setting of the voltmeter to measure RMS values, sign is not relevant.)
- Adjust the potentiometer so that the output is clearly clipped. Save a copy of the oscilloscope trace.
- Adjust potentiometer again so that the output is at its maximum value without clipping. Use the multi-meter to measure the maximum output voltage and calculate *gain* of the circuit at max output.
- Lower the frequency to 100 Hz. Switch to x-y mode and record a trace of the transfer characteristics when the output is not clipped. Repeat for a clipped output.

Question to ponder: Would the volume control potentiometer used at the input of the noninverting amp of part A work for the inverting amplifier here? Consider the results of part C in thinking about your answer.

E. Summing amplifier

We will now use the summing amplifier to design a 3-bit digital-to-analog converter (DAC). The basic schematic is shown in Fig. 4. For this experiment, we will use the LM324 op amp with $\pm$ 10 V power supplies. The "digital" inputs (D_2, D_1, and D_0) are DC voltages, provided by the extra DC supplies on the bench. A digital "1" will be represented using 1 V DC an a digital "0" will be represented using 0 V DC (or a direct connection to ground). You will use one positive/negative pair from one triple-supply source to power the op amp. The other DC sources can be used in whatever configuration works to provide the three input voltages. Be sure to connect the common terminals of all of the voltage sources together in the circuit.

The analog output, v_o, should be equal to:

$$v_o = -[2^2 v_{D2} + 2^1 v_{D1} + 2^0 v_{D0}] \ \ \text{V}$$

The goal is to have the output be within $\pm 5\%$ of the expected value.

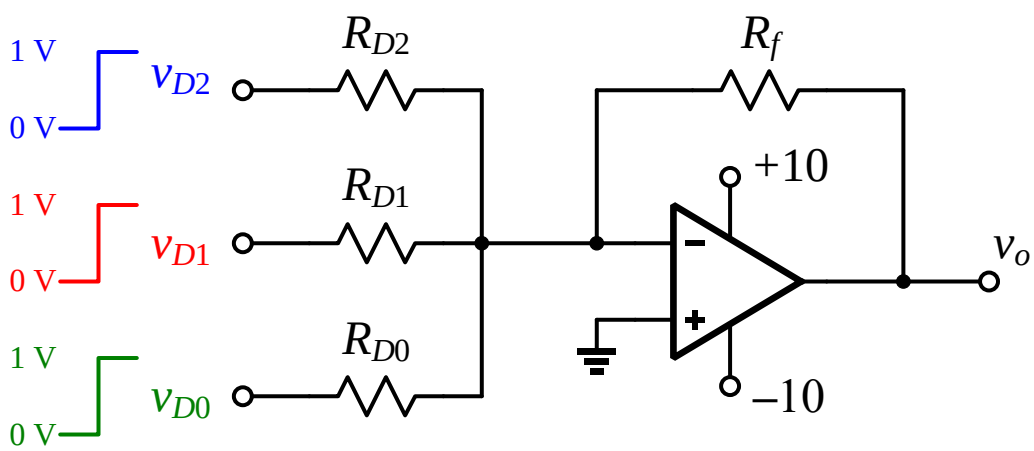

Figure 4.

- Derive an expression for v_o in terms of the inputs, D_2, D_1, and D_0.
- Assuming that D_2 is the 4's bit, D_1 is the 2's bit, and D_0 is the 1's bit, provide the required ratio of R_f/R_{D2}, R_f/R_{D1}, and R_f/R_{D0}.
- List the nominal values chosen by your group for R_f, R_{D2}, R_{D1}, and R_{D0} that satisfy the above ratios. It may be necessary to use multiple resistors in series or parallel to accurately realize the necessary ratios.
- Provide accurate measurements for the values of R_f, R_{D2}, R_{D1}, and R_{D0} that are used in your circuit.
- Construct the circuit shown in Fig. 4 and verify its basic functionality.
- Measure the DC output voltage, using the DC voltmeter, for all 8 possible digital inputs.

D_2 (V)	D_1 (V)	D_0 (V)	v_0 (V)
0	0	0	
0	0	1	
0	1	0	
0	1	1	
1	0	0	
1	0	1	
1	1	0	
1	1	1	

F. Integrating amplifier

The integrating amplifier circuit shown below uses an LMC660 op amp with ±8-V power supplies. The voltage signal used for the inputs is a 500-Hz *square wave* with 10-V peak-to-peak amplitude. (It switches back and forth between +5 V and –5V.)

(Note: R_2 is included to reduce errors in the operation of the circuit. Without R_2, the amplifier has essentially infinite gain at DC, and so any small DC voltages present at the input will cause the output to be shifted up or down by a possibly large amount. After you have completed your measurements, try removing R_2 to see the effect on the output waveform.)

Figure 6.

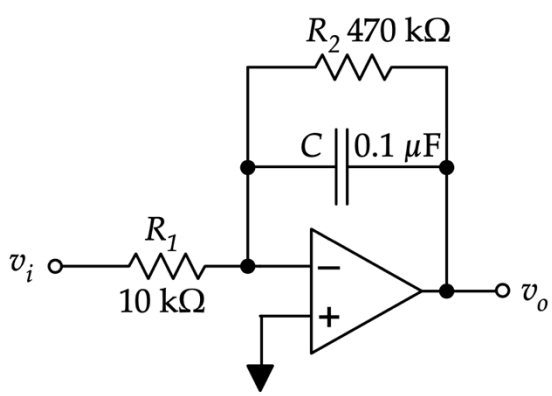

- Make a good sketch (with numbers) of the expected output of the integrator with square wave input as described above.
- Build the circuit.
- Observe the input and output together on the oscilloscope. Note from the oscilloscope trace the maximum and minimum values of the amplifier output. Save a good copy of the trace to include in the mini-report.
- Change the input from a square wave to a ramp with the same amplitude and frequency. (The input ramps from -5 V to 5 V in 2 ms and then back down.) Observe the input and output together and save a copy for the mini-report.
- Change the input to a sinusoid with the same amplitude and frequency. Observe the input and output together and save a copy for the mini-report.

G. Simple difference amplifier

The difference amplifier circuit shown below uses an LMC660 op amp with ±8-V power supplies. The voltage signal used for the inputs is a 1000-Hz sine wave with 0.25-V_{RMS} amplitude. Also, use the ohmmeter to measure the exact values of the resistors used and calculate the ratios R_2/R_1 and R_4/R_3.

Figure 7.

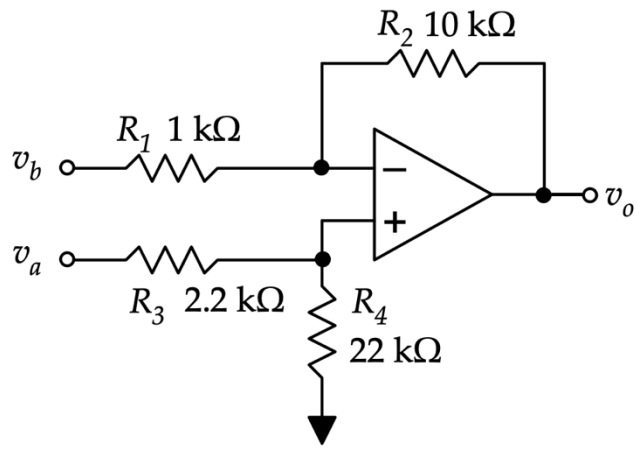

- Calculate the expected output function $v_o = f(v_a, v_b)$ for the amp, assuming that the resistor ratios are matched.
- Build the circuit.
- Set v_b to 0 V (connect it to ground) and connect the sinusoidal source to v_a. Use the multimeter to measure magnitude of the gain, $|G_a| = | v_o/v_a |$ by measuring the output voltage and input voltage and calculating the ratio. Observe the input and the output together on the oscilloscope. Save a copy of a clear trace to include in the report.
- Swap the inputs (connect v_a to ground and v_b to the sinusoid). Measure the magnitude of the gain $|G_b| = | v_o/v_b |$ for this path. Observe the input and the output together on the oscilloscope. Note the difference between this trace and the one seen in the previous measurement. Save a copy of the trace for the report.
- If this is really a difference amp, then the output should be zero if $v_a = v_b$. Connect *both* inputs to the sinusoidal source, so that $v_a = v_b$, and set the amplitude of the source to 5 V_{RMS}. (Since the two inputs are connected in common, we can call this the *common-mode input*, v_c, and the gain in this case would be the *common-mode gain*.) Observe the input and output on the oscilloscope and measure the gain in this case, $G_c = v_o/v_c$.

Questions to think about: In principle, when the two inputs are the same, the output should be zero. Why isn't it? What would you have to do to the circuit to make the common-mode output go to zero (or at least closer to zero)?

Why do you think that it is important for the output of the amplifier to be 0 V when the inputs are connected together?

H. Instrumentation amp

Build the instrumentation amplifier shown in Fig. 8, using op amps from the 660 chip. Use ±8V supplies.

Note: If you are running short on 10-kΩ and 1-kΩ resistors, you can substitute any set that has ratio of 10 for R_4 and R_3. For example, you can use R_4 = 22 kΩ and R_3 = 2.2 kΩ or R_4 = 47 kΩ and R_3 = 4.7 kΩ – you get the idea. Of course, you can always get more resistors from the electronics shop.

Figure 8.

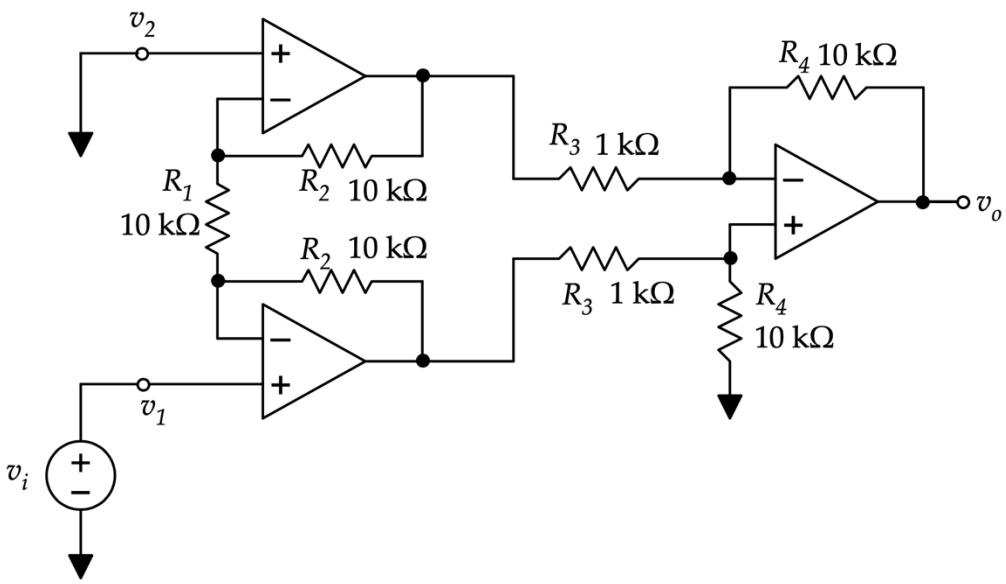

- Calculate the expected gain, $v_o = G(v_1 - v_2)$ of the amp.
- Build the circuit. Set up a sinusoidal signal source with an amplitude of 0.25 V_{RMS} and frequency of 1 kHz. Connect the signal to v_1 and connect v_2 to ground.
- Observe the input and output voltages (v_i and v_o) together on the oscilloscope. (If the output is clipped, reduce the amplitude of the input.) Save a good trace on the flash drive to include in your report. Measure the gain using the multimeter.
- Connect *both* inputs to the sinusoidal source, so that $v_1 = v_2$ and observe the input and output on the oscilloscope. Measure the gain in this case, $G_c = v_o/v_c$. How does the output of the instrumentation amplifier compare to the output of the difference amplifier from *G*?
- (Optional) Add a 100-kΩ potentiometer in series with R_1 and observe how the gain can be adjusted with the pot.

I. Reporting

Prepare and submit a report after you have finished the lab. A report template is available. Each lab group is required to submit a report (i.e. one report for two people). Be sure to include all calculations and graphs and answer all questions specified in the template.