Lab 2: Non-Ideal Effects in Operational Amplifiers
Due Date: Week of Sep. 22

This time, we look at some properties of real op amps, particularly things that might cause problems in op-amp circuits.

Prior to Lab

1. Look over the data sheets again for the LM 324, TL082, and LMC660 op-amps. Pay attention to the information relating to the non-ideal effects that we will study voltage and current limits, gain-bandwidth limits, slew rate limits and offset voltage, offset voltages / bias currents. Note that the LM324 and LMC660 are pin compatible, meaning that you can remove one from a circuit and plug the other directly into the same spot. Of course, you should turn off the power supplies before any swapping.

2. Perform any calculations that you can before lab.

3. Bring a flash drive so that you can record oscilloscope traces.

A. Power supplies and output voltage limits

We have seen some of this before.

- Design and build a non-inverting amplifier with a gain of 16, using a 324 op-amp with ±8-V power supplies. For the input signal, use a sinusoid with frequency of 100 Hz. Adjust the amplitude of the input so that the output is clipped. Display the input and output waveforms together on the oscilloscope and record a copy of the traces for your report. Carefully measure (use the cursors, if needed) the upper and lower limits of the output voltage and compare to the power supply values.

- Switch the oscilloscope into *x-y* mode to obtain a plot of the transfer function of the amp. Again, make sure the input voltage amplitude is big enough so that the output is clipped. Save a copy of the trace for your report.

- Repeat all of the above with the 660 op amp. The 660 is a "rail-to-rail" op amp. Note that the difference in the output saturation levels when compared to the 324.

- Both the 660 and 324 op amps can operate off of a single supply. Change the 660 circuit above so that the positive supply is +15 V and the negative supply lead is connected to ground. Adjust the amplitude of the input sinusoid to 0.25 V_{RMS}. Observe the input and output voltages together. There is an obvious problem. (And it shouldn't be too surprising.) Record an image of the badly distorted waveform for your report.

- Fix the problem by adding a DC offset of 0.47 V to the input signal. The offset at the input shifts the output by 7.5 V_{DC}. (If you haven't done this before, there is an offset option when setting the amplitude on the function generator. (In EE 201, some of you would *accidentally* set a DC offset with your input voltage and cause some consternation when trying to make your circuit work. Now, in EE 230, you can intentionally and

correctly use the offset feature.) Record an image of the oscilloscope traces for your report. Later, we will look at better ways to design amplifiers when using a single supply.

B. Output current limits

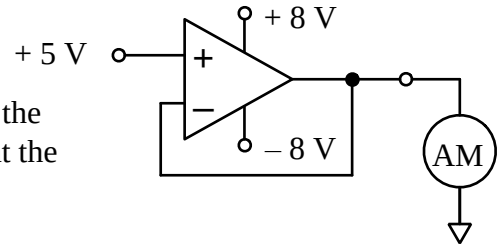

- Using the 324 with ±8V supplies, wire up one of the amps as unity-gain buffer. Apply 5 V DC to the non-inverting input. Use the voltmeter to check that the inverting terminal and output are also at 5 V.
- Set the multi-meter to work as an ammeter. Connect the ammeter from the output to ground. The serves effectively as a short circuit. The meter measures the current limit of the op amp. Record the current.
- Repeat the current-limit measurement for one of the amps from an LMC660 chip.
- Repeat the above measurements for one of the amps from a TL082 chip.
- Finally, using any one of the op amps, change the source to a sine wave with an amplitude of 4 V (2.83 V_{RMS}) and frequency of 1 kHz. With no load attached at the output, observe the output waveform to confirm that the 4-V sine wave appears. Then attach a 33-Ω resistor from the output to ground and observe the waveform again — it should be badly distorted due to the output current limitation. Record a copy of the oscilloscope trace for your report.

C. Gain-bandwidth product

In this exercise. we observe the gain-bandwidth limitations of a 660 op amp. In the steps described below, we will be making amplifiers with a fairly high gain. In order to avoid clipping, the input voltage must be very small. To achieve small input voltage easily, use the function generator followed by a 100-to-1 voltage divider (100 kΩ together with a 1 kΩ).

Because the amps have high gain, offset voltages may cause a problem. Before doing any AC measurements, be sure to check the output waveforms on the oscilloscope to make sure that there is no clipping. If offset voltages are causing problems, it may be necessary to reduce the input sinusoid amplitude even further or perhaps try a different op amp. Note that the small input voltage can be measured easily with the multi-meter, but it will be hard to see with the oscilloscope.

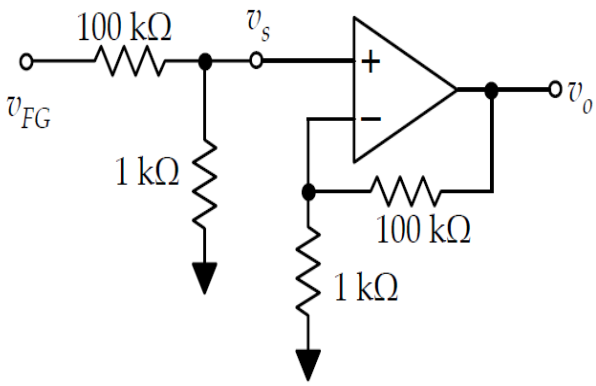

- Build a simple non-inverting amp with gain of 101 (R_2 = 100 kΩ and R_1 = 1kΩ) using the 660 op-amp with ±8-V power supplies, with a source voltage divider as shown above. Set the amplitude of the source sinusoid to 2 V_{RMS}, so that the input to the amp is 20 mV_{RMS} after being divided down.
- Measure the gain at a frequency of 100 Hz. (Remember the source voltage should be measured at the input to the op-amp, not at the output of the function generator.) This is the low-frequency gain of the amp, G_o.
- Then increase the frequency until the gain is reduced to 70.7% of the low-frequency value. This is the closed-loop low-pass corner frequency, f_{cl}.
- Calculate the product $G_o f_{cl}$, which should be equal to the gain-bandwidth product of the amplifier.
- Now use the Loopinator to measure the frequency response from 100 Hz to 100 kHz. Use at least 15 points per decade.
- Repeat all of the above steps but change the gain to 221 (R_2 = 220 kΩ and R_1 = 1kΩ). Set the function generator amplitude to 1.0 V_{RMS} so that the input to the amplifier is 10 mV_{RMS}, after being divided down.
- Repeat one more time but change the gain to 471 (R_2 = 470 kΩ and R_1 = 1kΩ). Set the function generator amplitude to 0.5 V_{RMS} so that the input to the amplifier is 5 mV_{RMS}, after being divided down.
- To finish this section, build the basic low pass inverting amp shown at right using an LMC660 amp with ±8 V supplies. Calculate the expected low-frequency gain and corner frequency. Then use the Loopinator to measure a frequency response from 100 Hz to 500 kHz. Note the measured corner frequency. Why is it so far off?

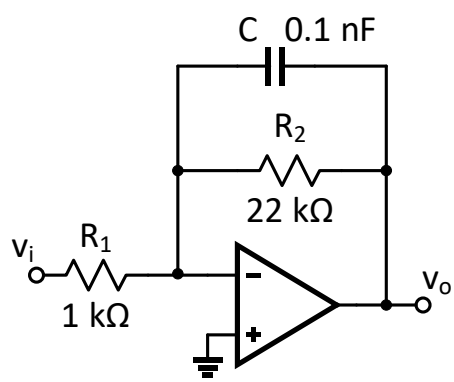

D. Slew rate

Now we look at the slew rate limits of the various amps.

- Use the LM324 op-amp to build a simple unity-gain buffer amplifier with ±8 V supplies.
- It is easiest to see slew rate limits using square waves. Apply a square wave with frequency of 1 kHz and amplitude of 2 V (4 VPP) to the non-inverting input. Observe both the input and output waveforms on the oscilloscope and concentrate on an edge (either high-to-low or low-to-high). You will probably have to decrease the time base to shorter times to see the transitions. Note that the output changes much more slowly than the input. This is due to the slew rate limit of the op amp. Save a copy of the trace to include in your report(s).

- Use the cursors to measure the slew rate, which is the slope of the output waveform in the transition region.
- Replace the LM324 amp with one from the TL082. Record a trace showing the slew rate limit of the TL082 output. Measure the value of the slew rate.
- Repeat once more, using the LMC660 op amp.
- Using the LMC660 op amp circuit, change the input to a sinusoid with frequency of 10 kHz and amplitude of 5 V (3.54 V_{RMS}). Observe the input and output together on the oscilloscope. Begin ramping up the frequency, while observing the waveforms. At some frequency (probably somewhere above 30 kHz), the output waveform will become visibly distorted. Note the frequency at which you can first see the distortion. Increase the frequency further and record a trace that clearly shows the slew rate distortion of the output.

E. **Offset voltages and bias currents**

Note: For this section, measure your resistors carefully and try to use resistors that are as well matched as possible.

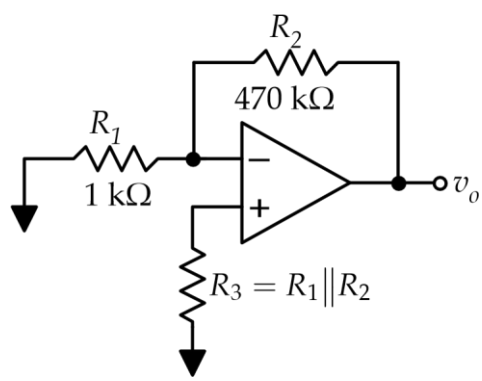

- Build the circuit shown using the LM324 op amp. Use ±8 V power supplies. Measure the DC voltage at the output, which is primarily the result of the offset voltage. Calculate the offset voltage. (Remember that V_{OS} is defined at the input, so you need to take the measured output and divide by the gain of the circuit.)
- Remove resistor R_3 (the parallel combination) and measure v_o again. Now, the output voltage should be due to the offset voltage *and* any bias current at the inverting terminal. In other words, the voltage *difference* between this measurement and the previous one should be the result of the bias current.
- Calculate the offset voltage and bias current for the LM324 op amp.
- Repeat the above measurements and calculations for the 660 op amp. (Note that the bias current of the 660 amp is very small, so there probably won't much difference between the two measurements.)
- Repeat one more time using the TL082 op amp. (This also has small input bias currents.)

- Choose the amp that had the biggest offset voltage and use it to build the circuit shown at right using ±8 V supplies. Make v_{FG} a 1-kHz sine wave with an amplitude of 1 V_{RMS}, so that v_i will have a 3-mV_{RMS} amplitude. Observe the output on the oscilloscope. It should consist of the amplitude sine wave and the DC error resulting from the offset voltage. Record the trace for your report.

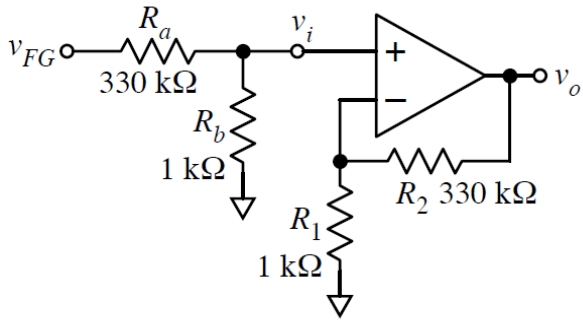

Reporting

Prepare and submit a report after you have finished the lab. A report template is available. Each lab group is required to submit one report (i.e., one report for two people). Be sure to include all calculations and graphs and answer all questions specified in the template.