Lab 3: First-Order Filters

Due Date: Week of Sep. 29

In this lab, we measure the frequency response of several different types of first-order filters and generate plots to convey this information. We will begin by doing a couple of the measurements using old-fashioned manual methods. For the rest of the lab, we will use the Loopinator.

We will also check the accuracy of a quick estimate, or a "quick-and-dirty," approach to extracting the cutoff frequency of a filter.

Prior to Lab

1. Review the transfer functions for low- and high-pass first order filters.
2. Read through the tutorials on measuring frequency response by hand and using MATLAB to read data from csv files.
3. Read through the instructions for using the Loopinator software.
4. Calculate the transfer function for each circuit, including values for the cutoff frequencies and pass-band gains.
5. Make sure that you have a flash drive or some other means for saving data.

A. RC low-pass filter

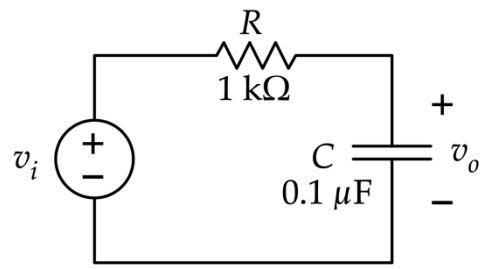

Figure 1

1. Compute the transfer function $H(s) = \frac{v_o}{v_i}$ and calculate the cutoff frequency of the circuit shown in Figure 1.
2. Build the circuit.
3. Using an input voltage of 2.5 V_{RMS}, show the input and output together on the oscilloscope.
4. Measure the frequency response over the range of 100 Hz to 100 kHz. Measure at 5 points in each decade of frequency. (Here is a suggested distribution of frequencies: 100, 150, 250, 400, 650 – 1000, 1500, 2500, 4000, 6500, etc. This will give a reasonably smooth distribution of points within each decade.)
   - At each frequency, use the DMM to measure the magnitude of the source voltage and the capacitor voltage. (You should measure the source voltage v_i for every frequency.)
   - At each frequency, use the oscilloscope to measure the phase difference between the capacitor voltage and the source voltage. Phase can be measured directly using the Measurement function on the scope, or it can be measured using the time delay technique described in the tutorial. *If you use the time delay method, you will need to first turn on waveform acquisition averaging to get a reliable result.*
5. Use the Excel spreadsheet provided on Canvas to plot the magnitude and phase of both your measured and calculated frequency response.

B. RC high-pass filter

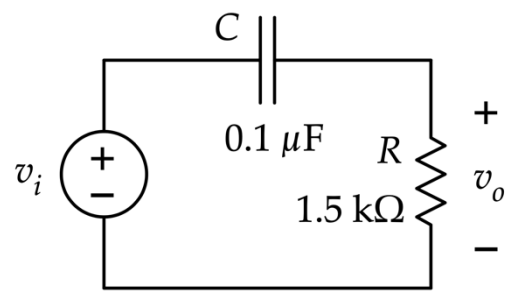

Figure 2

1. Compute the transfer function $H(s) = \frac{v_o}{v_i}$ and calculate the cutoff frequency of the circuit in Figure 2.
2. Build the circuit.
3. Using an input voltage of 2.5 V_{RMS}, observe the input and output together on the oscilloscope.
4. Measure the frequency response over the range of 100 Hz to 100 kHz. Measure at 5 points in each decade of frequency. (Here is a suggested distribution of frequencies: 100, 150, 250, 400, 650 – 1000, 1500, 2500, 4000, 6500, etc. This will give a reasonably smooth distribution of points within each decade.)
   - At each frequency, use the DMM to measure the magnitude of the source voltage and thecapacitor voltage. (You should measure the source voltage v_i for every frequency.)
   - At each frequency, use the oscilloscope to measure the phase difference between the capacitor voltage and the source voltage. Phase can be measured directly using the Measurement function on the scope, or it can be measured using the time delay technique described in the tutorial. *If you use the time delay method, you will need to first turn on waveform acquisition averaging to get a reliable result.*
5. Use the Excel spreadsheet provided on Canvas to plot the magnitude and phase of both your measured and calculated frequency response.

C. Active low-pass filter

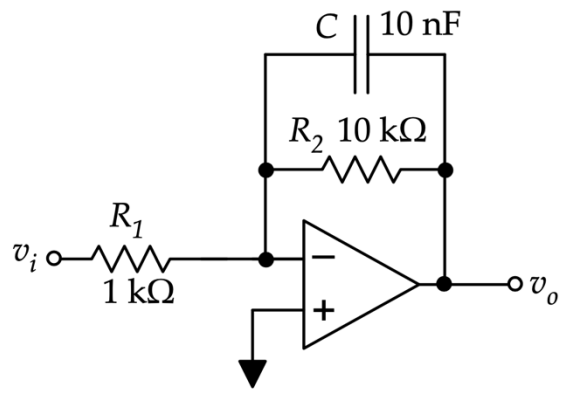

Figure 3

1. Compute the transfer function $H(s) = \frac{v_o}{v_i}$ and calculate the cutoff frequency of the circuit in Figure 3
2. Note the expected low-frequency gain and cutoff frequency
   a. For more accurate results you can measure the resistor and capacitor values
3. Build the circuit using the LMC660 with a $\pm 8\ V$ supply rail
4. Use the Loopinator to measure the frequency response of the filter
   a. Use an input voltage of $0.25\ V_{RMS}$
   b. Measure from $100\ Hz$ to $100\ kHz$ with at least 15 points per decade
5. Export the measured data from the Loopinator to MATLAB
6. Create a Bode plot with both your measured and calculated values on the same plots. Use dB for the magnitude and degrees for the phase.

D. RL low-pass filter

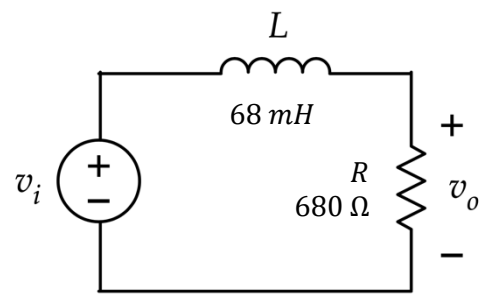

Figure 4

1. Compute the transfer function $H(s) = \frac{v_o}{v_i}$ and calculate the cutoff frequency of the circuit in Figure 4. In addition, calculate the expected magnitude of the transfer function at DC.
2. Before building the circuit, measure the inductance and series resistance of the inductor using the LCR meter in the lab.
    a. To measure the inductance and series resistance, place the inductor in the component holder, set the mode to Ls-Rdc, and set the frequency as close as you can to your calculated cutoff frequency.
    b. Note the measured values.
3. Now you will use a "quick-and-dirty" approach to measure the cutoff frequency and low-frequency magnitude.
    a. Build the circuit.
    b. Set the signal generator (v_i) to 2.5 V_{RMS} and a frequency a value well below the expected cutoff frequency (at least two decades, somewhere around 10 Hz).
    c. Use the DMM to measure the source voltage, v_i, and output voltage, v_o, then calculate the low-frequency magnitude of the transfer function.
    d. Divide the low-frequency magnitude by $\sqrt{2}$, i.e., calculate $\frac{|H(0)|}{\sqrt{2}}$.
    e. Now keep the source amplitude the same, and increase the frequency until v_o matches your calculated value–This is the actual cutoff frequency (why?).
4. You will probably find your measured low-frequency gain and cutoff frequency are different from your calculated values. Recalculate both quantities but replace the inductor with a more correct model of an inductor in series with a resistor, called R_L. The values of the inductor and the newly added R_L will come from the values measured earlier. In addition, you should use the measured value for R as well.
    a. Note that you should redraw the circuit to include R_L.
    b. The output voltage is still taken across the 680 Ω resistor.
5. Compare the results using the measured values. They should be much closer.

E. Design an active high-pass filter

Design, build, and test an active first-order high-pass filter. Use the LMC660 op amp with $\pm 8\ V$ supplies along with resistors and capacitors from your kit. (No inductors.)

Your filter should meet the following specs:

Description	Value
Cutoff Frequency	$1\ kHz \pm 10\%$
Pass-Band Gain	$-5 \pm 10\%$

1. Use the quick-and-dirty method (described above) to test basic functionality.
2. Take a screenshot of the oscilloscope showing the input and output waveforms together **at the cutoff frequency.**
3. Use the Loopinator to measure the full frequency response of your filter from $100\ Hz$ to $100\ kHz$

Reporting

Prepare and submit a report after you have finished the lab. A report template is available. Each lab group is required to submit one report (i.e., one report for two people). Be sure to include all calculations and graphs and answer all questions specified in the template. The report is due in one week on at your normal lab time