Diode characteristics

This week we take a first look at some diode characteristics. Most of the measurements will be done with our usual lab equipment. However, everyone will also get a chance to use the parameteranalyzer to measure *current-voltage* characteristics of a couple of diodes.

Prior to Lab

1. Review the ideal diode equation and the on/off model.
2. Look over the instructions for using the parameter analyzer.

Since there is only one analyzer, we will have to take turns using it. Each group can have up to 30 minutes to complete measurement on their diodes, which should be more than enough time.

The B1500A is a precision instrument that measures voltages down to the microvolt range and currents down to the nanoamp range. Being new, we are still learning how to make use of all its functions, but you will certainly appreciate the ease with which you can obtain device *i-v* characteristics.

A. Diode I-V characteristics with the parameter analyzer

Measure forward characteristics (linear and log scales together) for the following diodes: 1N4006 (general purpose rectifying diode), 1N4148 (fast switching diode), 1N4733 (5.1-V Zener), 1N4740 (10-V Zener), and two of the LEDs (red and green). Try some different measurement and graph settings to get a feel for how the analyzer works. Use the tutorial as a guide. Most of the silicon diodes will have fairly similar forward characteristics and the current should hit the 100 mA limit for forward voltages at 1.25 V or less. The LEDs will need much more forward voltage in order to get to 100 mA — probably in the range of 2 V - 3 V, depending on the particular LEDs that you use.

For the report, create and make a copy of a single plot that has the forward I-V characteristics (both linear and log) of the 1N4006 diode and the red LED. (You will need to use the "append" measurement function on the parameter analyzer — see the tutorial.) To view enough of the plots for a good comparison, the applied voltage should range from 0 to 5 V and the current axis should extend to 100 mA, which is the maximum allowed current.

Then measure the reverse characteristics (linear scale only) for all of the same diodes. The reverse voltage should extend from 0 to –15 V. Most of these curves will be quite boring.

For the report, create and make a copy of a single plot that has the reverse I-V characteristics of the 1N4006 diode. The measurement should range from 0 to –15 V and the current axis should range from 0 to 20 mA (of reverse current). Make the plot using *linear* axes. (Note that the parameter analyzer defaults to log axes forthe reverse measurement.)

B. Diode I-V characteristics at the lab bench

Build the circuit shown in Fig. 1 using a 1N4006 diode from your kit. (Be sure to measure the resistor value beforehand.) Apply the various DC voltages for the source listed in the table (included in the mini-report template). For each source voltage, measure the corresponding diode voltage and calculate the diode current. (The table should be familiar if you have read the diode notes from class.)

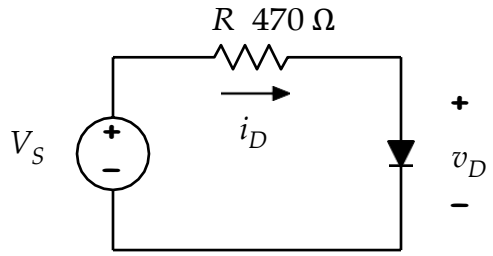

The repeat the measurement using the 1N7433 Zener diode over the same range.

Table for 1N4006 diode

V_S (V)	v_D	i_D	V_S (V)	v_D	i_D
-10			+3		
-8			+4		
-6			+5		
-4			+6		
-2			+7		
0			+8		
+1			+9		
+2			+10		

Table for 1N733 Zener

V_S (V)	v_D	i_D	V_S (V)	v_D	i_D
-10			-2		
-9			-1		
-8			0		
-7			+1		
-6			+2		
-5			+3		
-4			+4		
-3			+5		

C. Simple diode circuits

For each of the circuits below (Figs. 2 -5), first calculate the indicated currents. Then build the circuits and measure those currents. For the calculations, use the 0.7 V "on-off" model for the diodes. All of the diodes are 1N4006 rectifying diodes.

Figure 2: Do this first with $V_S = 1$ V. Then repeat with $V_S = 5$ V.

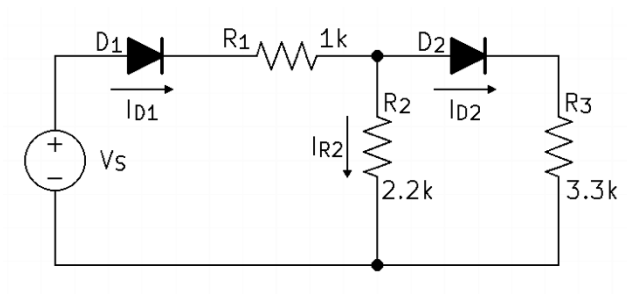

Figure 3: Do this first with $V_S = 5\ V$. Then repeat with $V_S = -5\ V$.

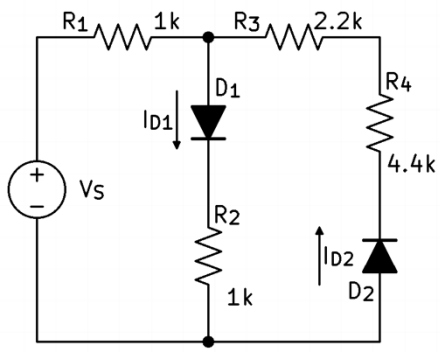

Figure 4: Find the currents in both diodes and all three resistors.

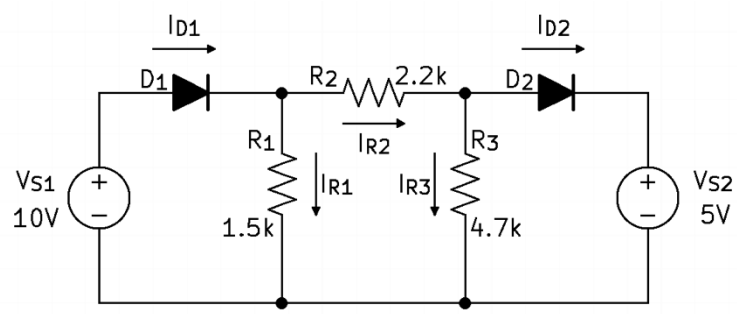

Figure 5: Find all of the indicated currents. Do this first for $V_S = 1\ V$, and repeat for $V_S = 5\ V$.

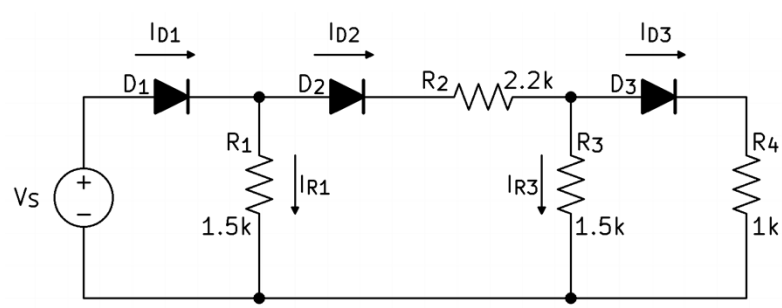

Reporting

Prepare and submit a report after you have finished the lab. A template is available. Each lab group is required to submit a report (i.e. one report for two people). Be sure to include all of the *I-V* curves for the various diodes. Include the calculations and measurements for the various diode circuits. The lab report is due in one week.