Bipolar junction transistor characteristics and applications

This week we look at BJT characteristics, build and measure some simple DC circuits, and study three BJT applications. You have two *npn* (PN2222 and MJE180) and two *pnp* (PN2906 and MJE170) transistors in your lab kits.

Prior to Lab

1. Look over the data sheets for the various transistors. Pay particular attention to the pin arrangement so that you know how to locate the emitter, base, and collector leads.
2. Look over the instructions for measuring a BJT using the parameter analyzer.

A. Quick measure of β_F and $i_C - v_{CE}$ characteristics with the parameter analyzer Since you will need to know β_F for the various transistors and you may not get to use the analyzer until later in the period, perform some quick measurements to determine β_F for each of the four transistors. Use the circuit shown in Fig. 1(a) for the two *npn* transistors and the the circuit of Fig. 1(b) for the *pnp* devices. Once the circuit is connected, measure the voltage across R_B to determine i_B and the voltage across R_C to determine i_C. Then calculate β_F for the transistor.

Figure 1.

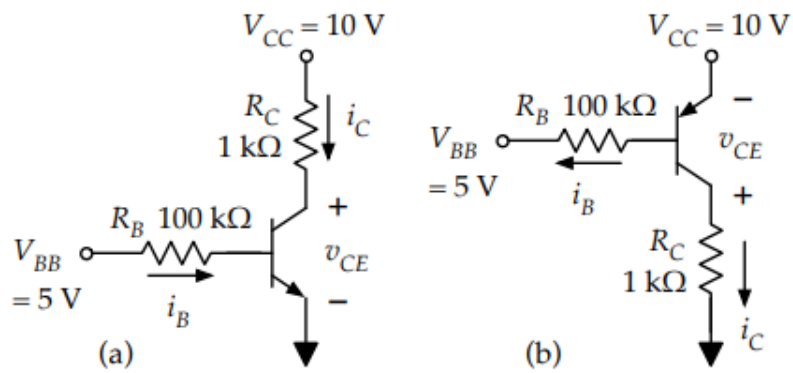

Then, during your turn with the parameter analyzer, measure a set of $i_C - v_{CE}$ curves for each transistor. Record a screen shot of the characteristics. (Or save the data in *csv* format and make plots using Excel.)

B. Simple BJT circuits

Build each of the circuits shown below. For parts (a), (b), and (c), use the PN2222 *npn* transistor. Use the PN2907 *pnp* for part (d).

Use the multi-meter to measure i_B, i_C, i_E, v_{BE}, and v_{CE} in each circuit. (In general, you don't need to use the ammeter much — when appropriate, just measure the resistor voltages and determine the current with Ohm's law.) Use what we have learned in class to calculate the expected values of the currents and voltages in each case. (In the calculations, use the value of β_F measured for the transistors in part A above.)

Figure 2.

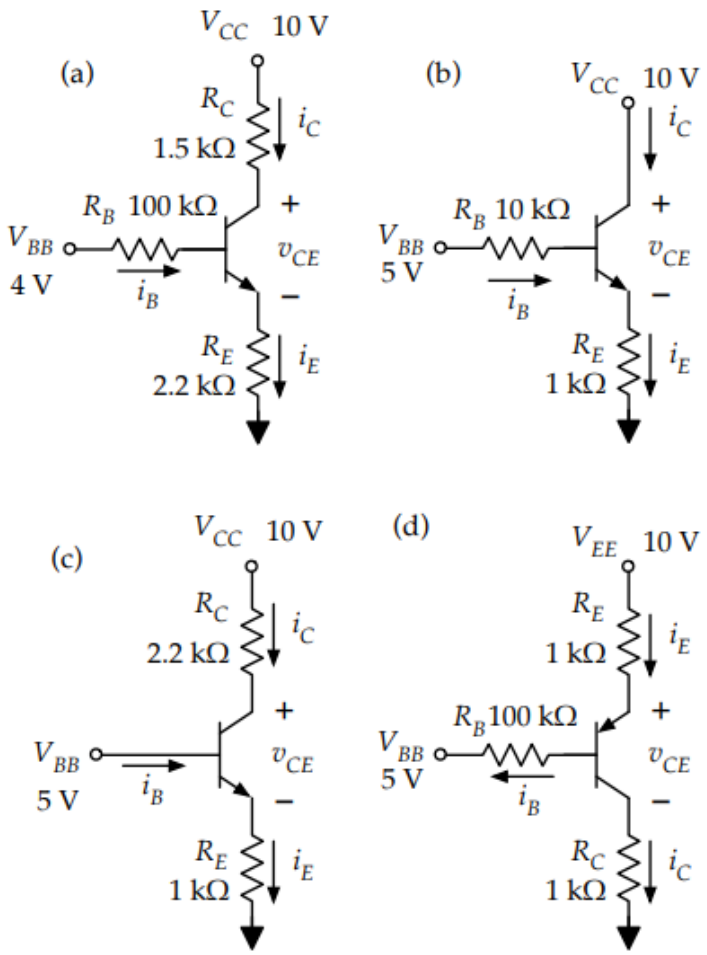

C. BJT as a switch.

As the first step in understanding the use of a BJT as a switch, build the simple inverter circuit shown in Fig. 3 using the PN2222 *npn* transistor. Use the +25-V output of the triple-output supply to provide the 10 volts for V_{CC}, and use the 6-V supply as the variable input.

Figure 3.

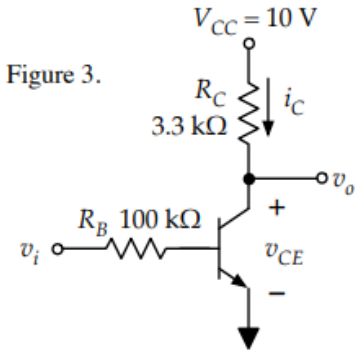

Measure the transfer characteristic — a plot of v_O (= v_{CE}) vs. v_i — of the circuit. Vary v_i from 0 V to 6 V in 0.25-V steps (25 points), measuring v_o at each step.

Make a plot of the transfer characteristic using Excel. (Note in particular the value of v_{CE} when the transistor is in saturation.) Then use the measured data to make plots of: i_c vs. v_i, P_R vs. v_i, and P_{npn} vs. v_i. P_r and P_{npn} are the power dissipation of the resistor and transistor. For the transistor, you can ignore the power associated with the base current — assume all the power being dissipated is due to the collector current: $P_{npn} = i_c \cdot v_{CE}$.

Build the simple non-inverting comparator using the LMC660 as shown in Fig. 4(a). Use a single 10-V supply to power the op-amp. (The negative supply is tied to ground.) Make the output go high (by making the input high), and measure the output voltage and output current. (Keep it simple — measure the resistor voltage and calculate the current using Ohm's Law.) Why aren't the voltage and current as high as they should be?

Figure 4.

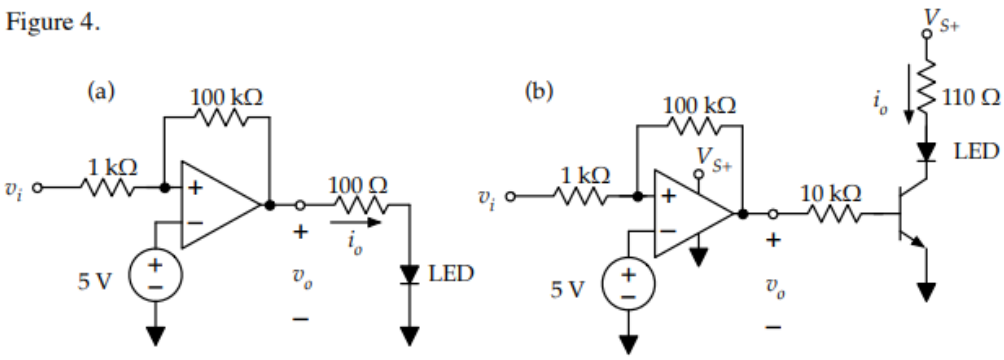

Now add an "output stage" to the op amp to provide more current for the LED, as shown in Fig. 4(b). Use the PN2222 *npn*, and make the 110-Ω resistor by using three 330-Ω resistors in parallel. (This keeps things from getting too hot.) Again, measure the current through the LED/resistor combination.

Switch the input to the function generator, set to produce to a square wave that has 0 V for the lower limit and 10 V for the upper limit. Set the frequency at 10 Hz. (You should be able to see the LED blinking at this rate.) Observe v_{CE} of the transistor on the oscilloscope. Save a clear copy of the trace for your report.

D. BJT as an amplifier

Go back to the inverting circuit of Fig. 3, using the PN2222 *npn* transistor. For the input, use the function generator, set to produce a sine wave at a frequency of 1 kHz. Set the amplitude to 0 (i.e. no sine wave) initially.

Attach the multimeter – set to DC volts – to measure v_{CE}. Then adjust the *DC offset* of the function generator to make the *DC* value of v_{CE} = 5 V. (The DC offset at the input should probably be somewhere between 2 V and 3 V.) Then increase the amplitude of the sine wave to 0.25 V_{RMS}. The output should now have an AC component as well – an inverted and amplified version of the input.

Use the oscilloscope to view the input and output waveforms together. Save a good copy of the traces for your report.

Use the multimeter on the AC setting to measure the amplitudes of the input and output signals, and calculate the magnitude of the voltage gain.

Reporting

Prepare and submit a report after you have finished the lab. Each lab group is required to submit a report (i.e. one report for two people). Be sure to include all of the *I-V* curves for the BJTs, the calculations for parts B, and all of the measurements / oscilloscope traces for parts B – E.