Iowa State University

Electrical And Computer Engineering

EE 230

LAB 6 REPORT

October 15, 2025

Partner 1 Josh Wolff

Partner 2 Isaiah Pridie

Introduction

We created the circuits provided in this document and the Lab 6 PDF. We used the Oscilloscope and mostly Triple Output DC Power Supply to create the oscillator circuits. We analyzed and documented their outputs by measuring and with the oscilloscope. We struggled getting the output to look correct trace-wise, but we eventually discovered orthogonal ground😀

B Wien-Bridge Oscillator

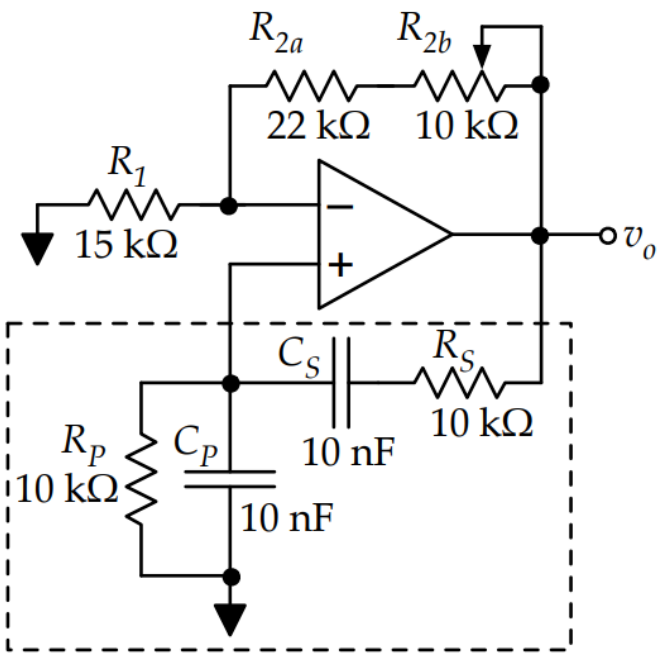

The table below lists the measured and calculated oscillation frequencies of the Wien-Bridge oscillator in Hz:

Quantity	Value
Measured f_{osc}	1523 Hz
Calculated f_{osc}	1591 Hz

Figure 1: *Plot of undistorted output voltage of the Wien-Bridge oscillator.*

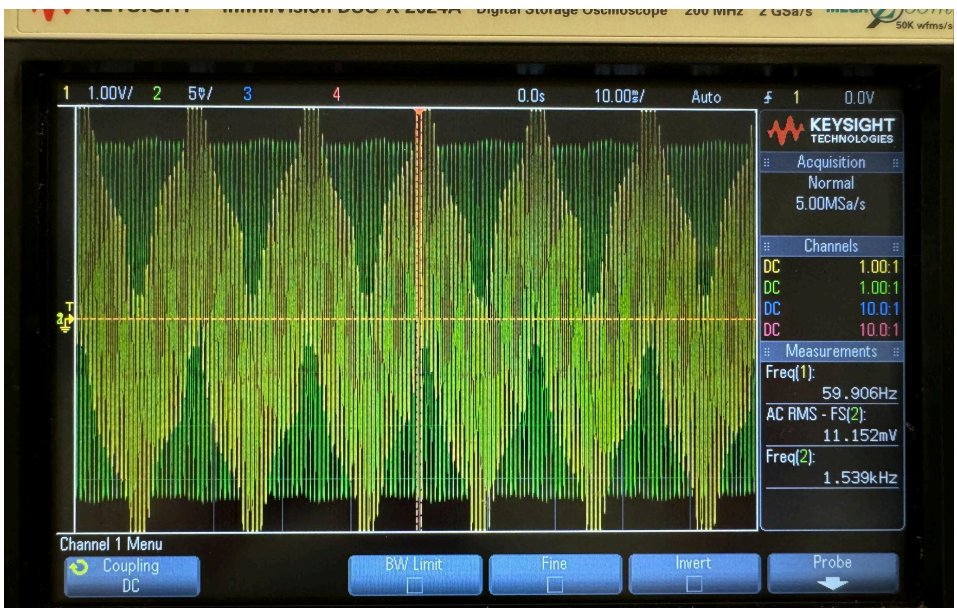

Figure 2: *Plot of distorted output voltage of the Wien-Bridge oscillator.*

C Design of Wien-Bridge Oscillator

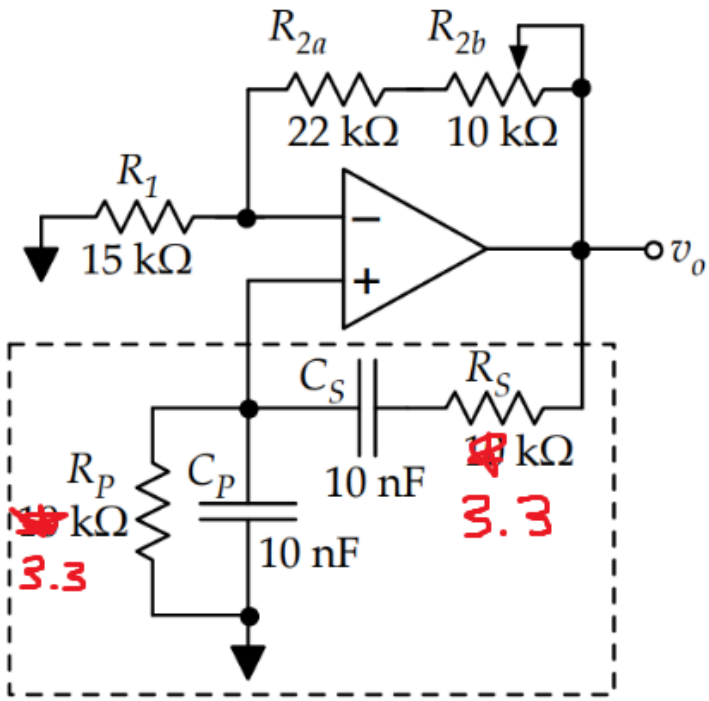

***Figure 3**: Schematic of the designed 5 kHz Wien-Bridge oscillator.*

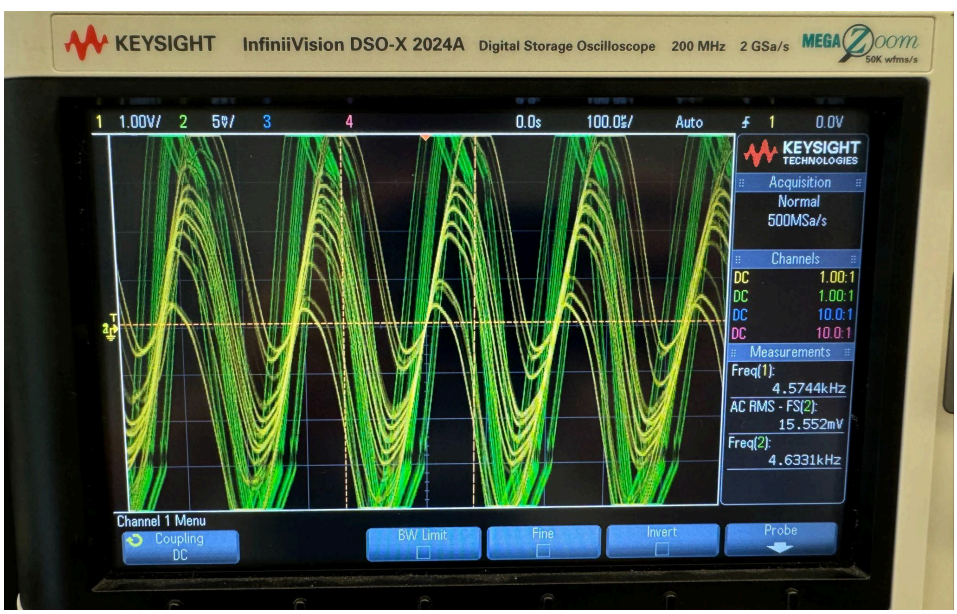

***Figure 4**: Screen shot of the undistorted output of the Wien-Bridge oscillator.*

The table below lists the nominal and measured component values, with units, for the newly designed Wien-Bridge oscillator.

Component	Nominal Value
R_1	15k
R_2	22k
R_P	3300
R_S	3300
C_S	10nF

The measured oscillation frequency is: f_{osc}:_____4.63kHz_____

We wanted to make the oscillator so that the oscillation frequency is 5 kHz (± 10%). We used the equation $\omega_{osc} = \frac{1}{R_p C_p} = \frac{1}{R_c C_c}$, with 31415 rad/s. We ended up choosing to keep the capacitors at the same value and adjust the resistor values to alter the frequency.

D Phase-Shift Oscillator

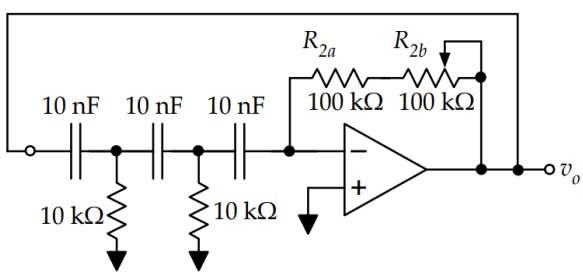

The table below lists the measured and calculated oscillation frequencies of the Wien-Bridge oscillator in Hz:

Quantity	Value
Measured f_{osc}	890Hz
Calculated f_{osc}	918Hz

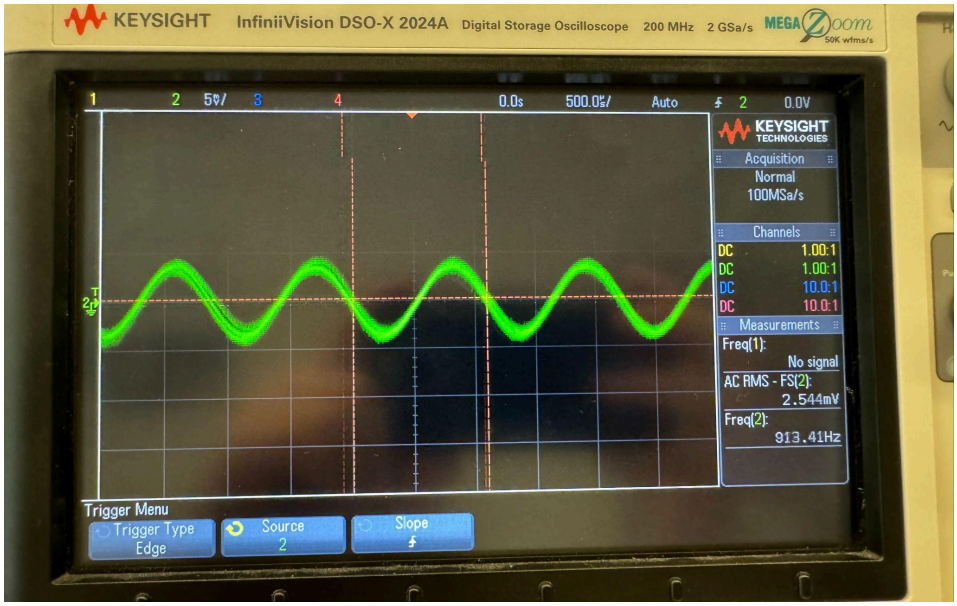

Figure 5: *Plot of undistorted output voltage of the phase shift oscillator.*

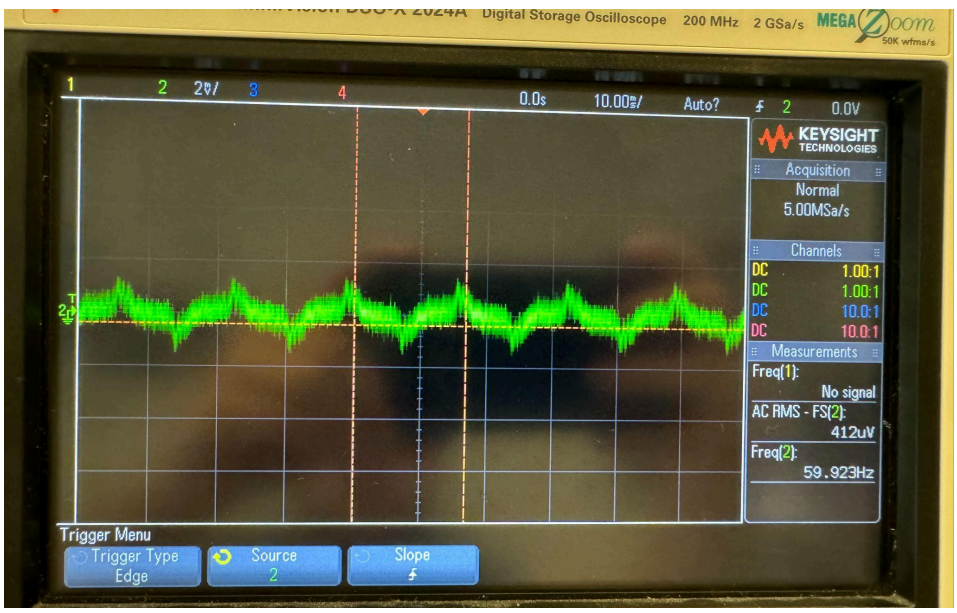

Figure 6: *Plot of distorted output voltage of the phase shift oscillator.*

E Quadrature Oscillator

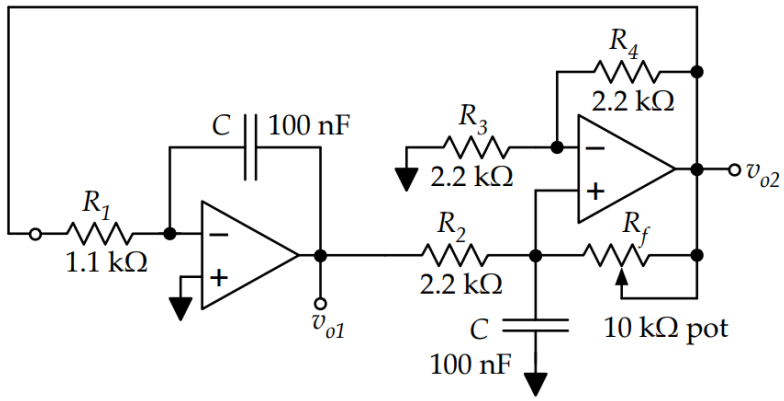

The table below lists the measured and calculated oscillation frequencies of the Wien-Bridge oscillator in Hz:

Quantity	Value
Measured f_{osc}	1.25k
Calculated f_{osc}	1446 Hz

***Figure 7**: Plot of undistorted output voltage of the quadrature oscillator, showing both vo1 and vo2.*

***Figure 8**: Plot of distorted output voltage of the quadrature oscillator, showing both vo1 and vo2.*

Conclusion

Provide a summary of your design choices, issues, results, and achievements in this lab.

For design choices, we looked at our equations for our calculations for what omega (frequency*) should be. We noticed we could change the magnitude of the number by changing the resistor values which would change the denominator in some of the equations. Doing this allowed us to quickly calculate what resistor values we should use to get to the frequency.

We had a LOT of issues with noise. Many of the traces look screwed up and they are but it was because of noise. We thought we had everything grounded that needed to be grounded because we just grounded everything normally. It wasn't until Duro came in and told us to use the Orthogonal Ground on the Triple Output DC Power Supply when our traces became MUCH more clearer with MUCH less noise. Unfortunately, he didn't come in until the last circuit. That is why the traces for parts B and C look pretty bad. We only knew they were correct by the frequency measurements on the oscilloscope. We literally had a TA look over our circuits and talked to them for much of the lab trying to figure out why our traces looked so poor. But we did get the correct values.

Achievements in this lab is learning about oscillators. And learning about Orthogonal Ground. We will likely be using normal ground in combination with Orthogonal Ground from here on out.