Lab 6: Linear Oscillators

Due Date: Week of October 20

This week we will focus on building and testing three different linear oscillators.

A. Prior to Lab

1. Review the theory for the oscillator circuits (Section 15.2 of the text).
2. Calculate the expected oscillation frequencies for parts B, C, and D.
3. Make sure that you have a flash drive or some other means for saving data.

B. Wien-Bridge oscillator

Start by building a simple non-inverting amp as shown at right. Use the LMC 660 op amp with ±8V power supplies. Feedback resistance R_2 is formed with the series combination of a 22-kΩ fixed resistor and 10-kΩ potentiometer.

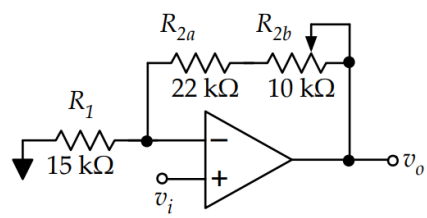

Test the operation of the amp using a 1-kHz sinusoid at the input. Adjust the potentiometer so that the gain is in the range of 2.5 - 2.75.

Now turn the simple amp into an oscillator by adding the Wein-bridge tank circuit at shown at right.

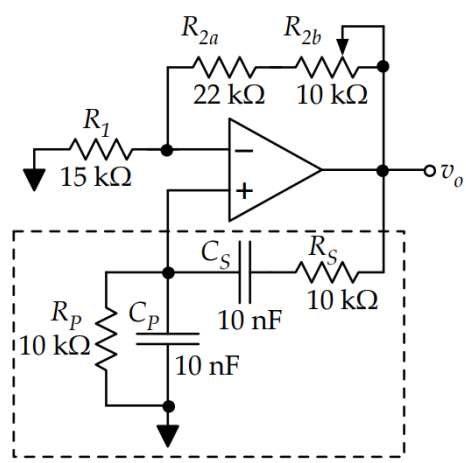

Observe the output voltage on the oscilloscope. Initially, the output will probably be a flat line at 0 V. Slowly adjust the potentiometer to increase the gain of the amp. When the amp gain increases to a value of 3, the circuit should become unstable and the output should begin to oscillate.

Once the circuit begins to oscillate, make a few observations. First, measure the oscillation frequency. (Use the frequency measurement feature of the oscilloscope.) Confirm that the frequency matches the expected value of

$$\omega_{osc} = \frac{1}{R_P C_P} = \frac{1}{R_S C_C}$$

Then, adjust the potentiometer so that the output is not clipped. Save a screen shot of the pure sinusoid for your report.

Finally, adjust the potentiometer to its maximum value. The output oscillation should be clipped (distorted). Save a screen shot of the distorted waveform for your report.

C. Wien-Bridge 2

Re-design the Wein-bridge circuit so that the oscillation frequency is 5 kHz (± 10%). Adjust the gain so that the output sinusoid is not distorted. Save a good screen shot (showing the measured oscillation frequency) of the output for your report.

D. Phase-shift oscillator.

Build the phase-shift oscillator shown below.

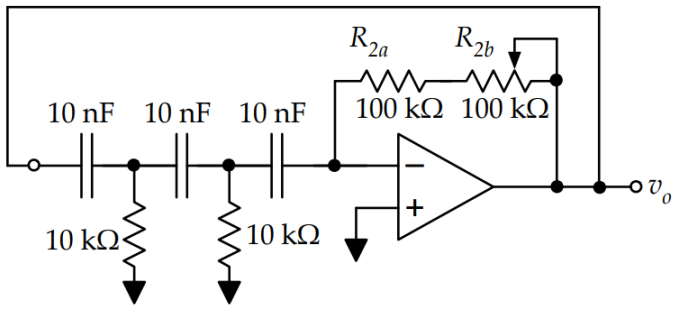

If the circuit does not start oscillating when you first power it up, adjust the potentiometer to increase the gain. Once the circuit is oscillating, adjust the potentiometer until the output is an undistorted sine wave. Record the oscillation frequency and save an oscilloscope screen shot for your report. Confirm that the oscillation frequency matches the expected value. Then increase the potentiometer to its maximum value so that the output is distorted. Save a screen shot of the distorted waveform for your report.

E. Quadrature Oscillator

Finally, try the quadrature oscillator circuit shown below. This one is slightly trickier, but it has the interesting feature of providing two sinusoidal outputs that are 90° out of phase.

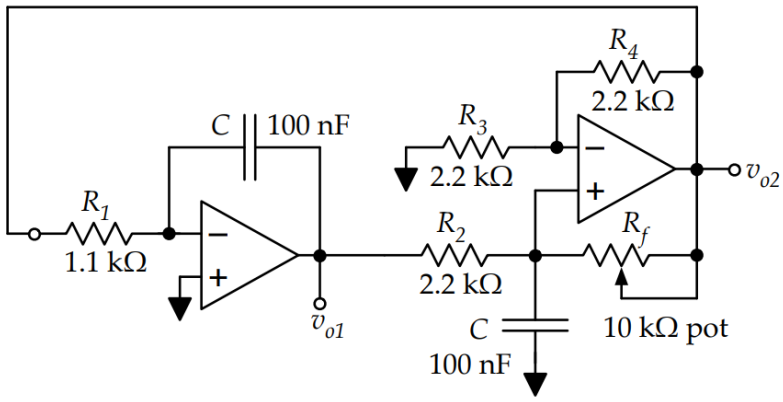

R_1 can be made using two 2.2-kΩ resistors in parallel or a 1-kΩ and 100-Ω resistor in series.

Potentiometer R_f must be *decreased* to 2.2 kΩ or less, in order to have sufficient gain for the circuit to oscillate. Since this circuit is a bit more involved, check all the connections carefully.

When the circuit is oscillating, display both v_{o1} and v_{o2} together on the oscilloscope — they should be 90° out of phase. Adjust R_f to obtain clean sinusoids and take a screen-shot for the report. Then decrease R_f further to distort the waveforms. Note that v_{o2} will distort sooner and be worse than v_{o1}. This is due to the filtering action of the left-hand integrator circuit. Take a screen shot of the distorted waveforms for the report.

F. Reporting

Prepare and submit a report after you have finished the lab. A template is available. Each lab group is required to submit a report (i.e. one report for two people). Be sure to include all the calculations and the various oscilloscope screen shots. The report is due in one week at your regular lab time.