Surrogate Modeling of Binary Distillation Column using DWSIM and Machine Learning

Isha Joshi

1 Problem Statement

The objective of this work is to develop a surrogate model for a binary distillation column using machine learning techniques to predict key outputs such as condenser duty, reboiler duty, and product compositions.

2 DWSIM Flowsheet Description

A binary distillation column was modeled using DWSIM, consisting of a feed stream, condenser, and reboiler.

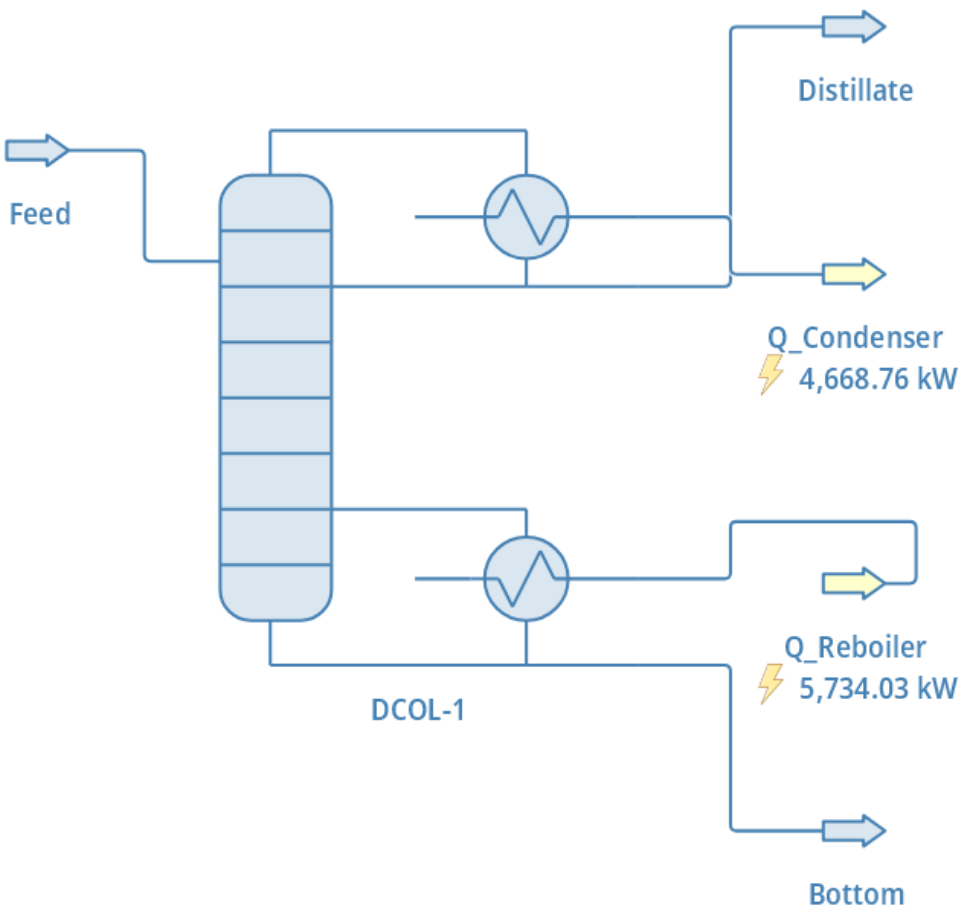

Figure 1: DWSIM Flowsheet of Binary Distillation Column

3 Input and Output Variables

Input Variables

- T_{in} (Feed temperature)
- P_{in} (Feed pressure)
- $x_{Benzene_in}$ (Feed composition)
- N_{Stages} (Number of stages)
- $Feed_Tray$ (Feed stage location)
- $Reflux$ (Reflux ratio)
- B_Draw (Bottoms draw rate)

Output Variables

- Qc_kW (Condenser duty)
- Qr_kW (Reboiler duty)
- $xD_Benzene$ (Distillate composition)
- $xB_Toluene$ (Bottoms composition)

4 Dataset Generation Strategy

A dataset of approximately 6000 points was generated using DWSIM by varying operating parameters. Only converged simulations were retained.

5 Range of Operating Conditions

Inputs were varied within physically meaningful ranges to ensure realistic operation and avoid non-converged solutions.

6 Data Preprocessing

- Removal of non-converged data
- Handling missing values
- Feature scaling for SVM and Neural Network

7 Machine Learning Methods

The following models were implemented:

- Random Forest Regressor
- Support Vector Regression (SVM)
- Neural Network (MLPRegressor)

8 Model Training and Validation

The dataset was split into 80% training and 20% testing data. Models were evaluated using R^2, RMSE, and MAE.

9 Performance Comparison

Model	Output	R^2	RMSE	MAE
Random Forest	Qc_kW	0.9904	53.93	17.50
	Qr_kW	0.9912	52.70	14.86
	xD_Benzene	0.7406	0.0254	0.0176
	xB_Toluene	0.9475	0.0245	0.0174
SVM	Qc_kW	0.9880	60.40	28.62
	Qr_kW	0.9880	61.36	29.35
	xD_Benzene	0.9765	0.0076	0.0054
	xB_Toluene	0.9913	0.0099	0.0070
Neural Network	Qc_kW	0.9906	53.36	17.85
	Qr_kW	0.9913	52.39	18.37
	xD_Benzene	0.9910	0.0047	0.0032
	xB_Toluene	0.9945	0.0080	0.0046

10 Model Prediction Plots

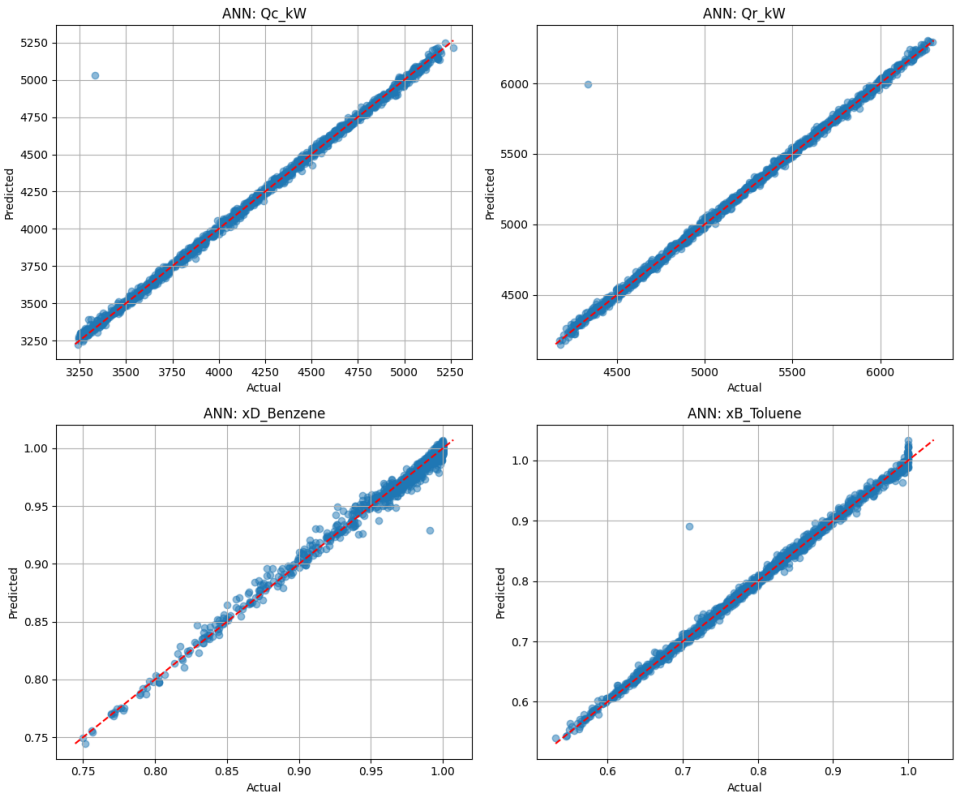

Figure 2: Neural Network Predictions vs Actual Values

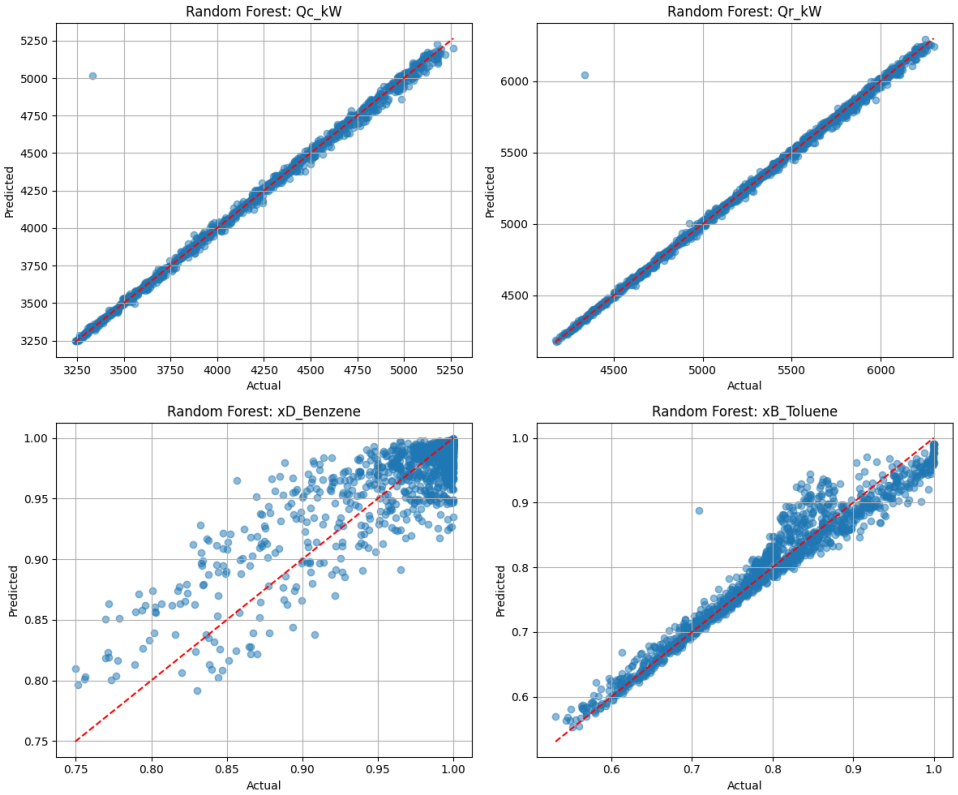

Figure 3: Random Forest Predictions vs Actual Values

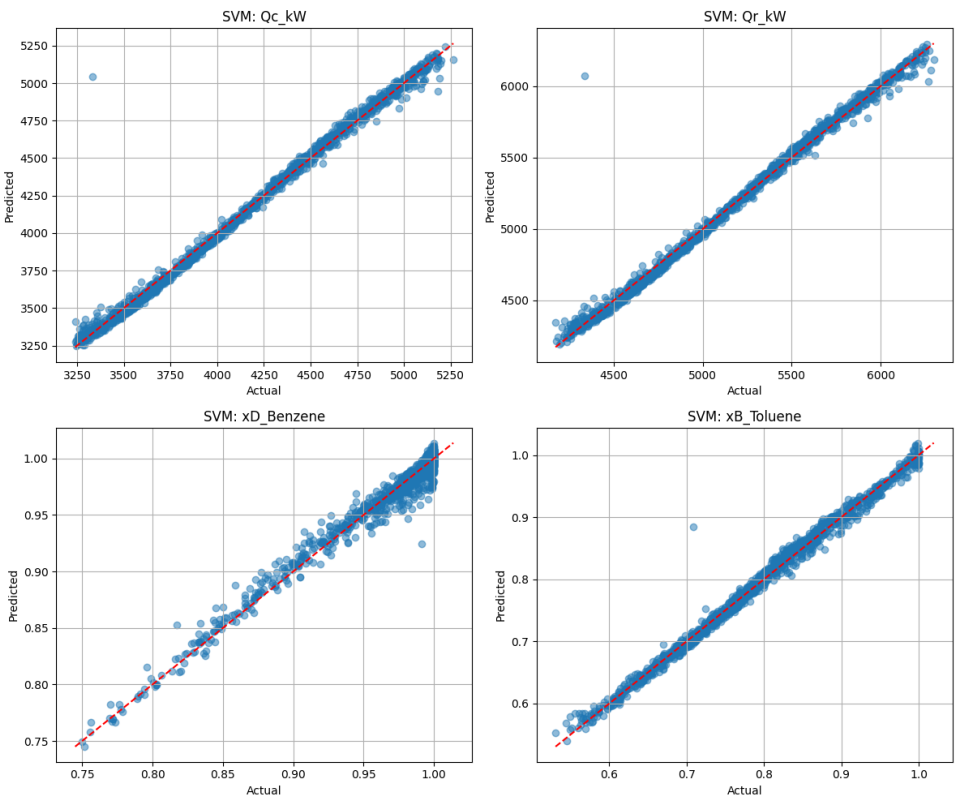

Figure 4: Support Vector Machine Predictions vs Actual Values

11 Physical Consistency and Robustness

The model predictions follow expected physical trends such as increased distillate purity with higher reflux ratio and improved separation with more stages.

12 Conclusion

The Neural Network model demonstrated the best overall performance, especially for composition prediction, and is selected as the final surrogate model.