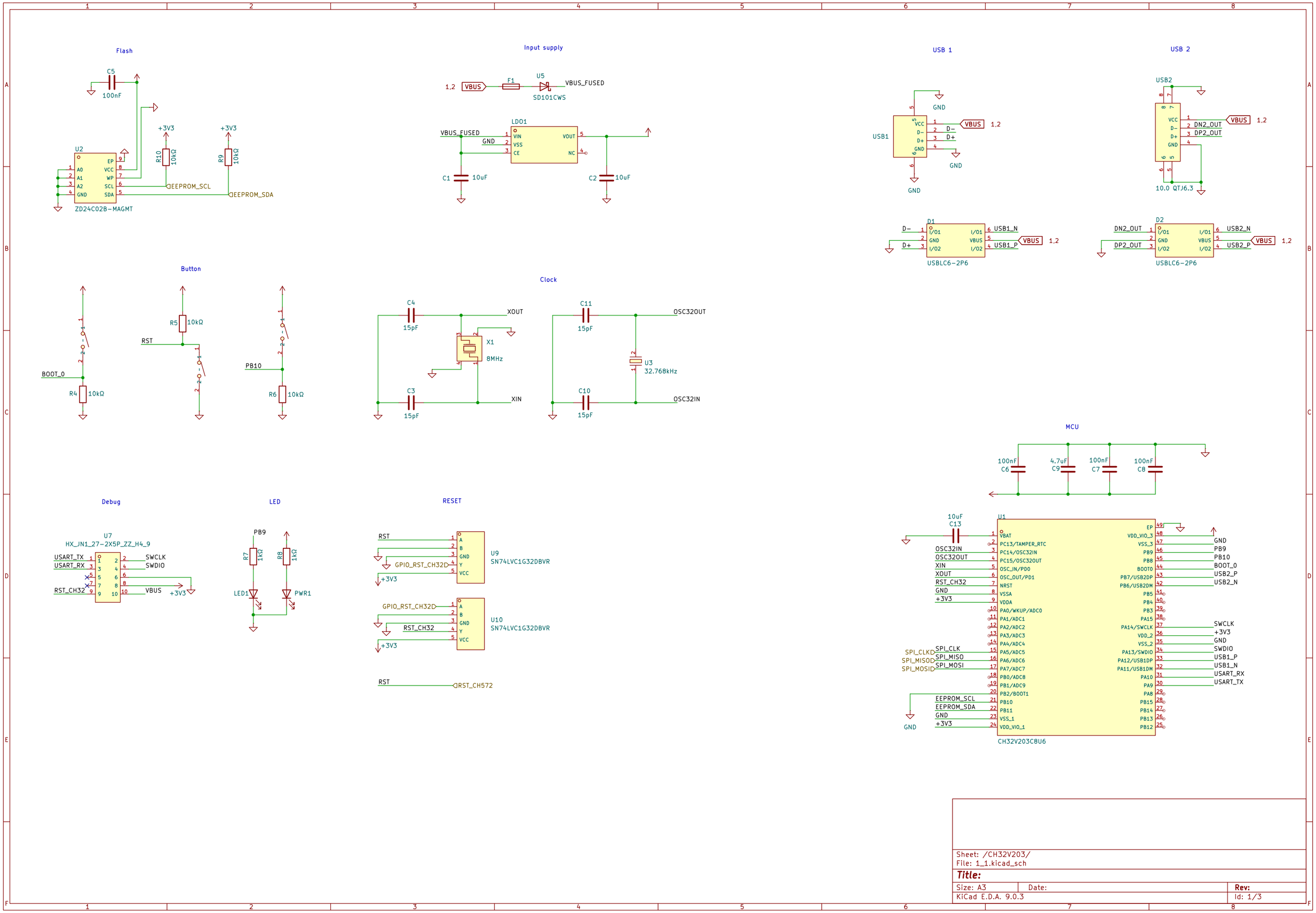
Flash
C5
100nF
U2
ZD24C02B-MAGMT
+3V3
R10
10kΩ
R9
10kΩ
EEPROM_SCL
EEPROM_SDA
Input supply
1.2
VBUS
F1
U5
SD101CWS
VBUS_FUSED
LDO1
VIN
VSS
CE
VOUT
NC
GND
C1
10uF
C2
10uF
USB 1
USB1
VCC
D-
D+
GND
VBUS
1.2
D1
USBLC6-2P6
USB1_N
USB1_P
USB 2
USB2
DN2_OUT
DP2_OUT
10.0 QTJ6.3
D2
USB2_N
USB2_P
Button
BOOT_0
R4
10kΩ
R5
10kΩ
RST
PB10
R6
10kΩ
Clock
C4
15pF
XOUT
X1
8MHz
C3
15pF
XIN
C11
15pF
OSC32OUT
U3
32.768kHz
C10
15pF
OSC32IN
MCU
100nF
C6
4.7uF
C9
100nF
C7
100nF
C8
Debug
U7
HX_JN1_27-2X5P_ZZ_H4_9
USART_TX
USART_RX
RST_CH32
SWCLK
SWDIO
VBUS
+3V3
LED
PB9
R7
1kΩ
R8
1kΩ
LED1
PWR1
RESET
RST
GPIO_RST_CH32
+3V3
U9
SN74LVC1G32DBVR
U10
SN74LVC1G32DBVR
RST_CH572
10uF
C13
U1
CH32V203C8U6
OSC32IN
OSC32OUT
XIN
XOUT
RST_CH32
GND
+3V3
SPI_CLK
SPI_MISO
SPI_MOSI
EEPROM_SCL
EEPROM_SDA
PB10
PB11
PB9
PB8
BOOT0
PB7/USB2DP
PB6/USB2DM
PB5
PB4
PB3
PA15
PA14/SWCLK
PA13/SWDIO
PA12/USB1DP
PA11/USB1DM
PA10
PA9
PA8
PB15
PB14
PB13
PB12
USB2_P
USB2_N
USART_RX
USART_TX
Sheet: /CH32V203/
File: 1_1.kicad_sch
Title:
Size: A3
Date:
Rev:
KiCad E.D.A. 9.0.3
Id: 1/3

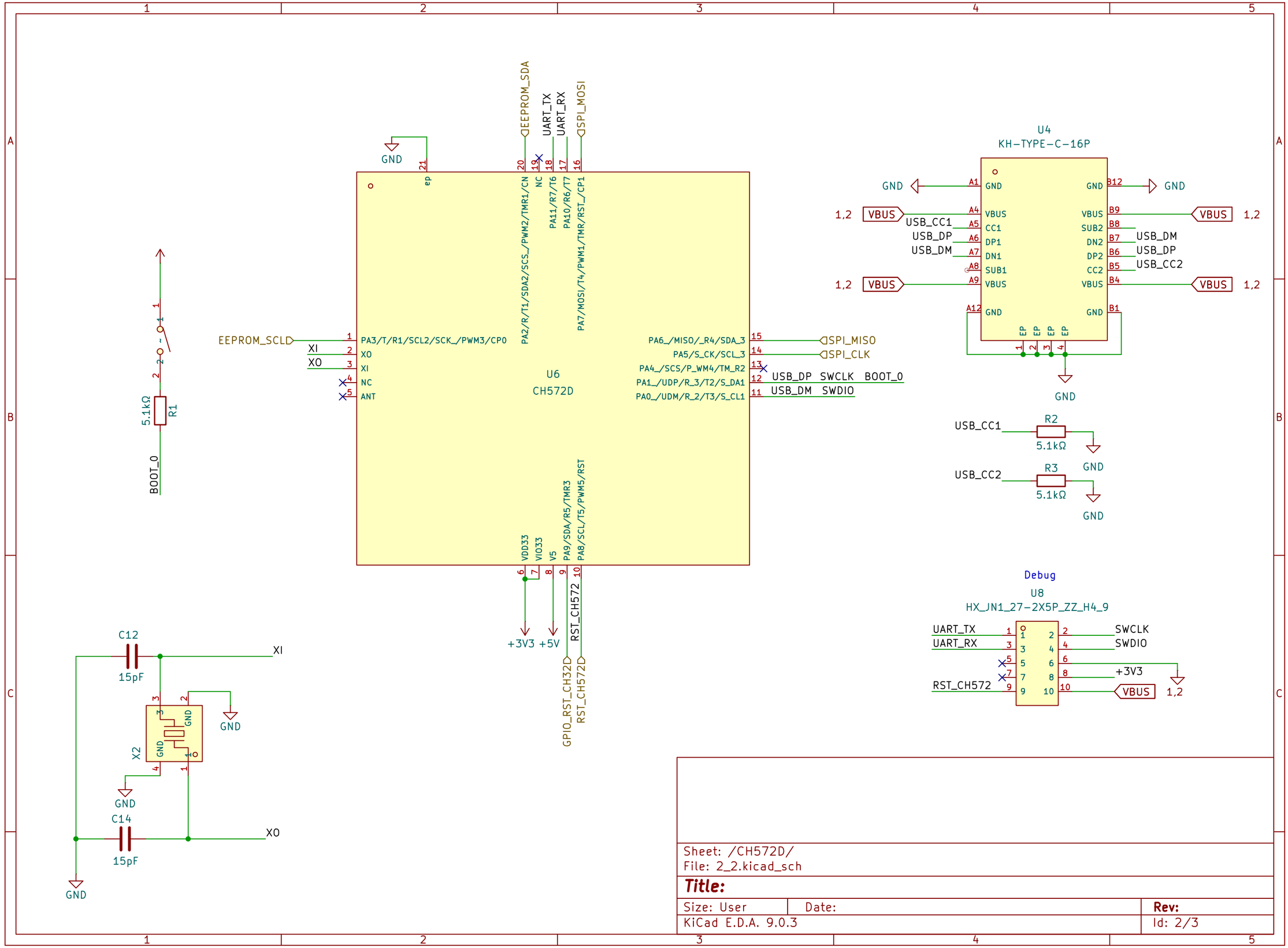
U6
CH572D
PA3/T/R1/SCL2/SCK_/PWM3/CP0
XI
XO
NC
ANT
PA2/R/T1/SDA2/SCS_/PWM2/TMR1/CN
PA11/R7/T6
PA10/R6/T7
PA7/MOSI/T4/PWM1/TMR/RST_/CP1
PA6_/MISO/_R4/SDA_3
PA5/S_CK/SCL_3
PA4_/SCS/P_WM4/TM_R2
PA1_/UDP/R_3/T2/S_DA1
PA0_/UDM/R_2/T3/S_CL1
VDD33
VIO33
V5
PA9/SDA/R5/TMR3
PA8/SCL/T5/PWM5/RST
EEPROM_SCL
EEPROM_SDA
UART_TX
UART_RX
SPI_MOSI
SPI_MISO
SPI_CLK
USB_DP SWCLK BOOT_0
USB_DM SWDIO
GND
+3V3 +5V
RST_CH572
GPIO_RST_CH32
RST_CH572
BOOT_0
5.1kΩ
R1
U4
KH-TYPE-C-16P
VBUS
USB_CC1
USB_DP
USB_DM
USB_CC2
R2
R3
Debug
U8
HX_JN1_27-2X5P_ZZ_H4_9
SWCLK
SWDIO
C12
15pF
C14
X2
Sheet: /CH572D/
File: 2_2.kicad_sch
Title:
Size: User
Date:
Rev:
KiCad E.D.A. 9.0.3
Id: 2/3

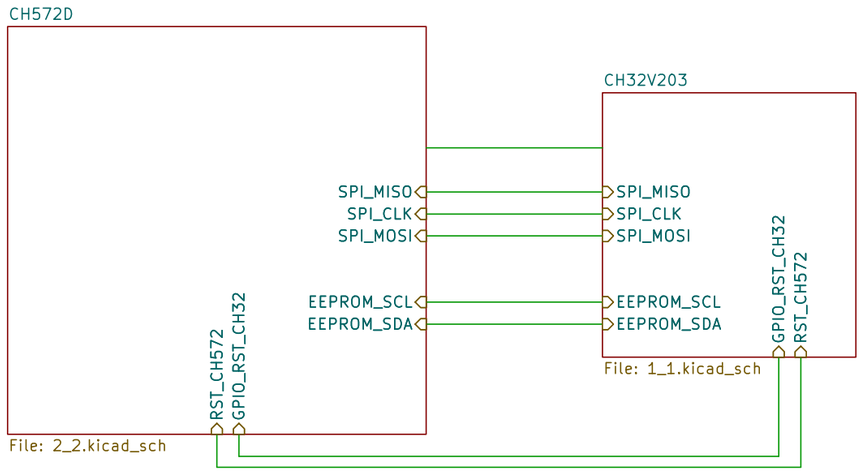

Sheet: /
File: usb_sp.kicad_sch

Title:

Size: A4	Date:	**Rev:**
KiCad E.D.A. 9.0.3		Id: 3/3