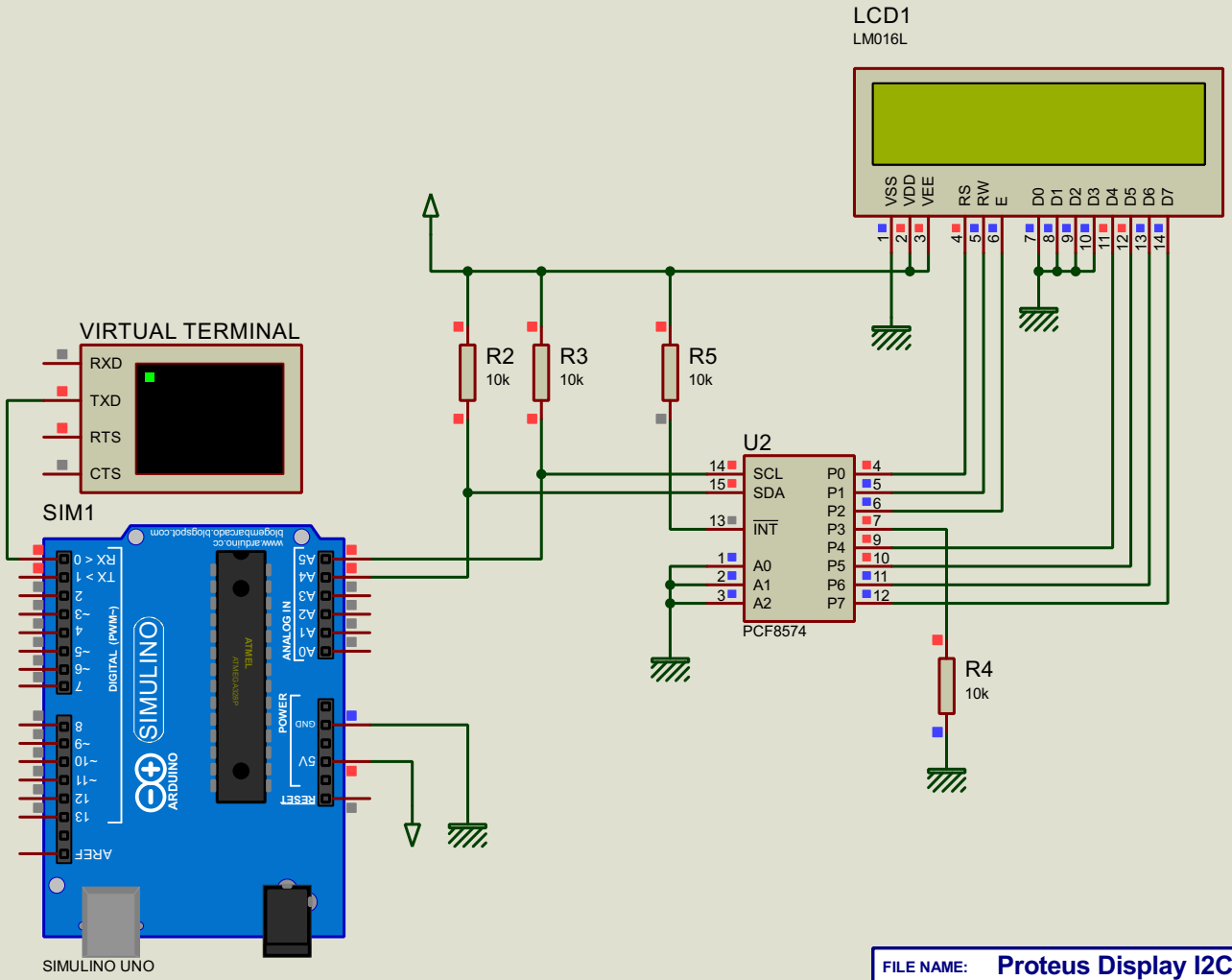

FILE NAME:	Proteus Display I2C UNO.pdsprj	DATE:	02/01/2018
DESIGN TITLE:	Proteus Display I2C UNO.pdsprj	PAGE:	1 of 1
PATH:	C:\Users\Ismael Lopes\Desktop\Proteus\Proteus Display I2C UN		
BY: @AUTHOR	REV:@REV	TIME:	09:29:52