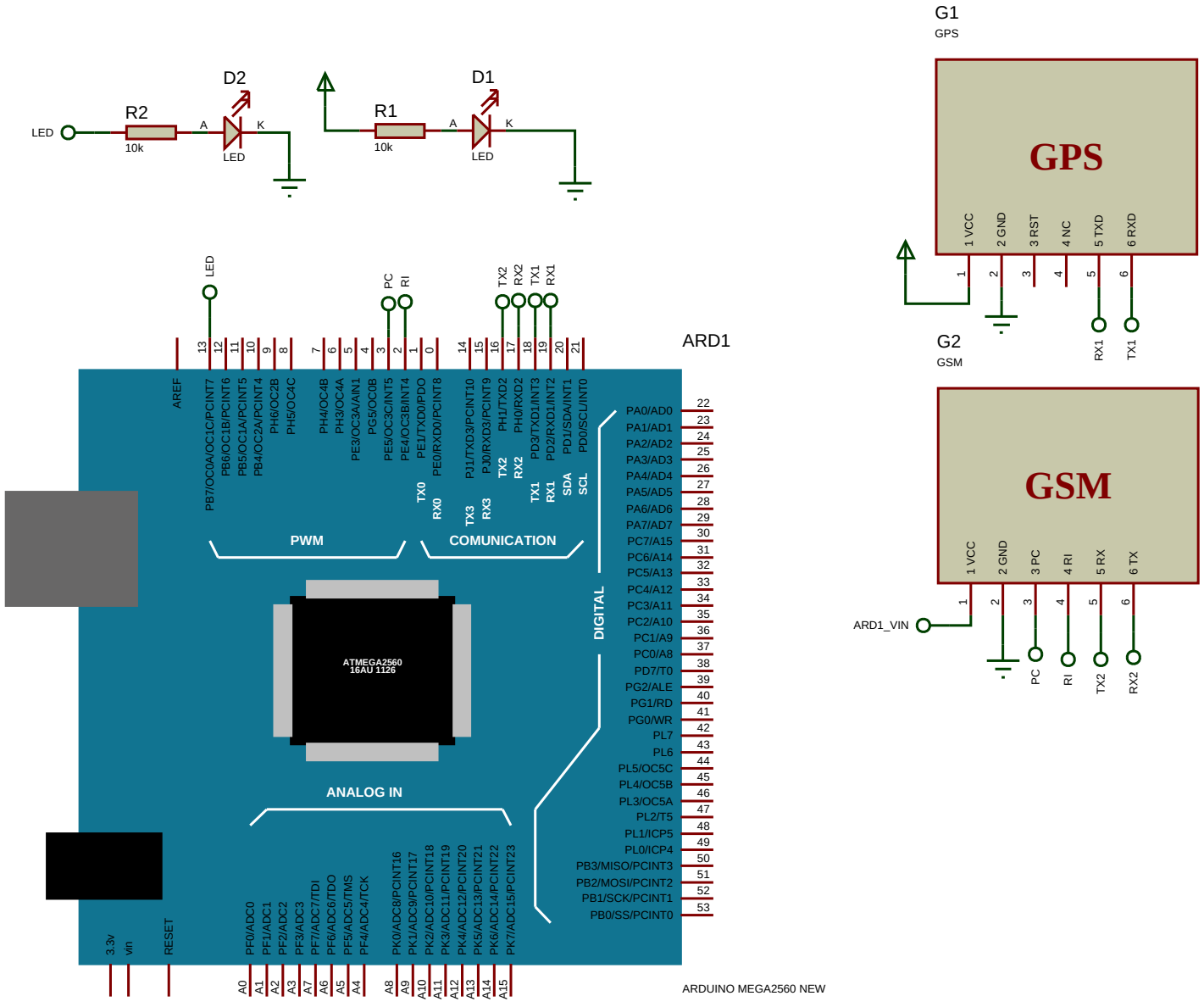
D2
R2
LED
10k
A
K
LED
D1
R1
10k
A
K
LED
G1
GPS
GPS
1 VCC
2 GND
3 RST
4 NC
5 TXD
6 RXD
RX1
TX1
G2
GSM
GSM
1 VCC
2 GND
3 PC
4 RI
5 RX
6 TX
ARD1_VIN
PC
RI
TX2
RX2
ARD1
LED
PC
RI
TX2
RX2
TX1
RX1
AREF
PB7/OC0A/OC1C/PCINT7
PB6/OC1B/PCINT6
PB5/OC1A/PCINT5
PB4/OC2A/PCINT4
PH6/OC2B
PH5/OC4C
PH4/OC4B
PH3/OC4A
PE3/OC3A/AIN1
PG5/OC0B
PE5/OC3C/INT5
PE4/OC3B/INT4
PE1/TXD0/PDO
PE0/RXD0/PCINT8
PJ1/TXD3/PCINT10
PJ0/RXD3/PCINT9
PH1/TXD2
PH0/RXD2
PD3/TXD1/INT3
PD2/RXD1/INT2
PD1/SDA/INT1
PD0/SCL/INT0
TX0
RX0
TX3
RX3
TX2
RX2
TX1
RX1
SDA
SCL
PWM
COMUNICATION
DIGITAL
ATMEGA2560
16AU 1126
ANALOG IN
3.3v
vin
RESET
PF0/ADC0
PF1/ADC1
PF2/ADC2
PF3/ADC3
PF7/ADC7/TDI
PF6/ADC6/TDO
PF5/ADC5/TMS
PF4/ADC4/TCK
PK0/ADC8/PCINT16
PK1/ADC9/PCINT17
PK2/ADC10/PCINT18
PK3/ADC11/PCINT19
PK4/ADC12/PCINT20
PK5/ADC13/PCINT21
PK6/ADC14/PCINT22
PK7/ADC15/PCINT23
PA0/AD0
PA1/AD1
PA2/AD2
PA3/AD3
PA4/AD4
PA5/AD5
PA6/AD6
PA7/AD7
PC7/A15
PC6/A14
PC5/A13
PC4/A12
PC3/A11
PC2/A10
PC1/A9
PC0/A8
PD7/T0
PG2/ALE
PG1/RD
PG0/WR
PL7
PL6
PL5/OC5C
PL4/OC5B
PL3/OC5A
PL2/T5
PL1/ICP5
PL0/ICP4
PB3/MISO/PCINT3
PB2/MOSI/PCINT2
PB1/SCK/PCINT1
PB0/SS/PCINT0
ARDUINO MEGA2560 NEW