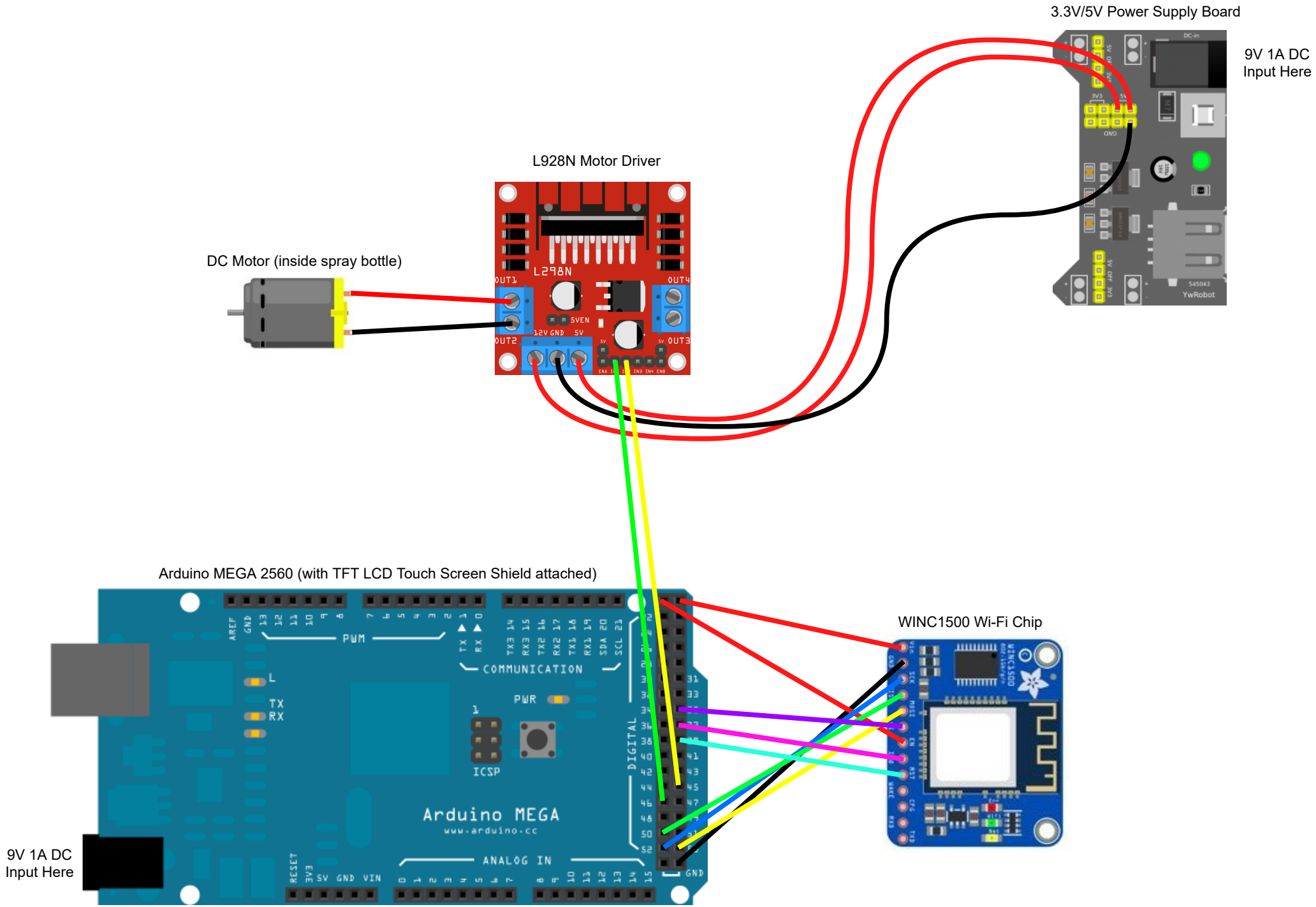
3.3V/5V Power Supply Board
9V 1A DC
Input Here
L928N Motor Driver
DC Motor (inside spray bottle)
Arduino MEGA 2560 (with TFT LCD Touch Screen Shield attached)
WINC1500 Wi-Fi Chip
9V 1A DC
Input Here