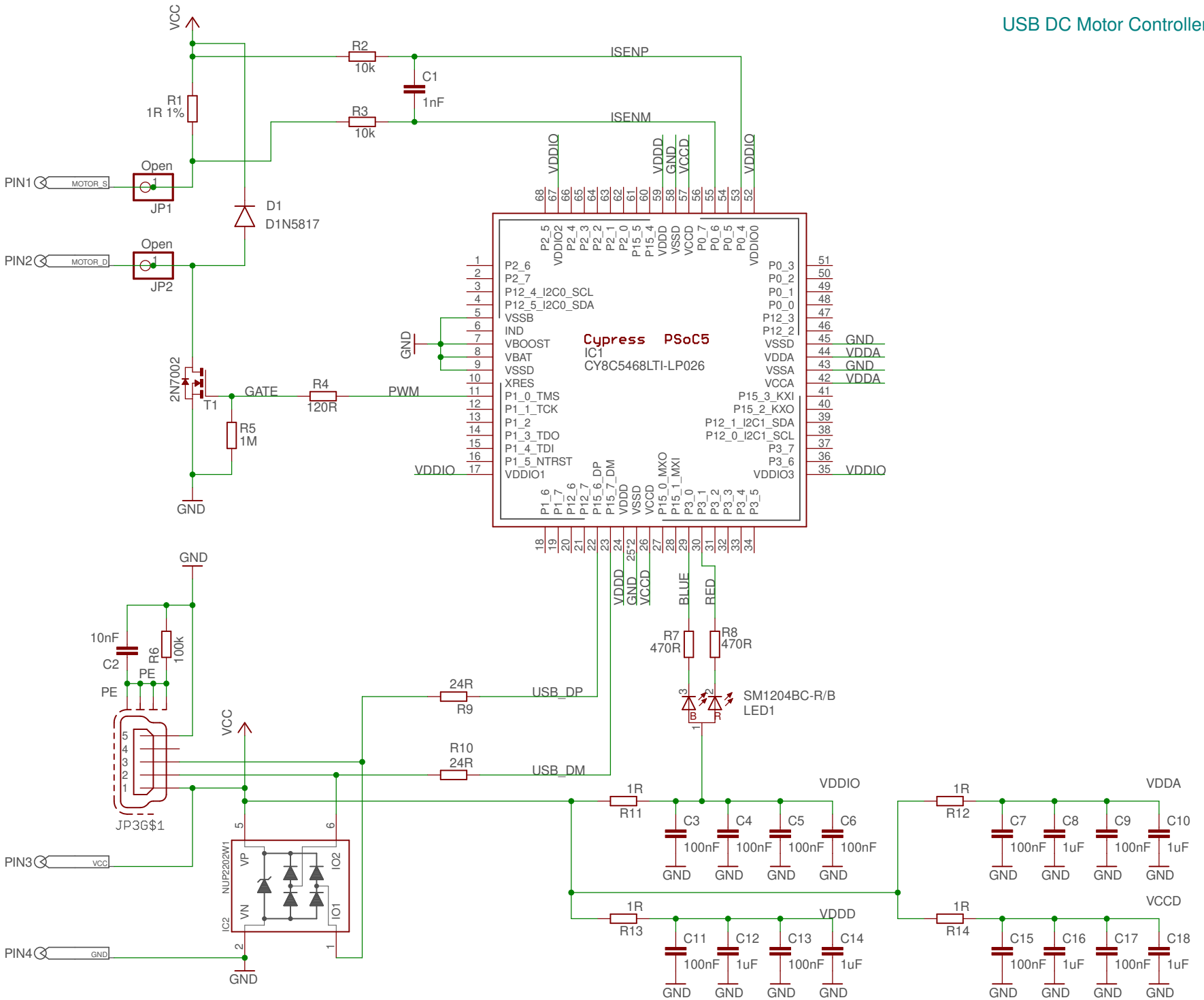USB DC Motor Controller