Title

Name
Department
University
Address
Email

Name
Department
University
Address
Email

Name
Department
University
Address
Email

Abstract*—Skyline query is well-known to find out the dominant objects from a large number of datasets. While multiple organizations want to analyze their combined dataset, skyline queries can assist in this regard. Maintaining privacy along with the data integrity of participating organizations' datasets is important because their commercial success depends on the result of these queries. This paper proposes a new framework for the multi-party skyline query that encompasses both privacy and data integrity. To ensure the privacy of participants' datasets, it adopts commutative encryptions by employing multiple independent entities. To support the data integrity, it combines encrypted unique tags (UTs) with the encrypted datasets of all participants. In addition, to retain the anonymity of participants' encrypted data from anyone including authorities, it exploits the re encryption. Although the proposed framework also practices homomorphic encryption, which usually sacrifices the data integrity, here due to the usage of UTs, it is maintained. This paper is a preliminary report of the proposed framework.

***Keywords*—Skyline query, ElGamal cryptosystem, Mix-net, Data integrity, Homomorphic encryption**

I. Introduction

In the contemporary world, different commercial organizations, namely hotels, hospitals, real estates, resorts, etc., produce a huge amount of datasets and use them to make important decisions about their business [1]. Usually, these financial and confidential datasets are highly sensitive and the organizations do not intend to disclose them in front of other organizations. Hence, maintaining the privacy of these commercial organizations' datasets is essential. resort costing distance a 20 5 b 10 8 c 20 7 d 30 4 e 10 7 f 30 7 b 8 6 distance 4 2 e c a f d 5 10 15 20 25 30 costing Fig. 1. An example of skyline query for multiple resorts. Multiple organizations need to analyze their combined dataset to find out those particular ones capable to serve better in their concerned domains. For this, they calculate the selective representative datasets of each participant without 978-1-6654-9435-9/21/$31.00 ©2021 IEEE This paper develops a framework for multi-party skyline query that confirms both privacy and data integrity. To attain these, it attaches encrypted unique tags (UTs) along with the participant's encrypted datasets separately that confirms the data integrity. Besides, it deploys anonymous credentials [14] to ensure the participant's anonymous identity, commutative ElGamal encryption [4] to assure significant privacy through multiple entities' mutual effort, and re encryption mix-net [7] to keep the anonymity of participant's encrypted data even from involved authorities, altogether. The following sections provide a description of the proposed framework. Namely, Section 2 reviews related works. Section 3 illustrates the required cryptographic tools. Section 4 explains the configuration and the individual stages of the framework. Section 5 presents the evaluation and finally, Section 6 concludes the paper.

II. Related Works

While developing an information security protocol, data integrity is definitely a more basic requirement than data privacy. Due to any reason, if the data integrity is compromised, the originality of the data would be breached. Hence, without retaining data integrity, any attempt to maintain data privacy becomes impractical. Homomorphic encryption (HE) – a widely used cryptographic operation to develop various information security protocols can easily breach data integrity if proper precautions are not taken. For example, in a secure multi-party skyline framework, a dishonest participant may intentionally attempt to avail an illegal benefit by breaching the data integrity. Many existing framework designs did not concentrate on this critical issue. Namely, the framework proposed in [10] was designed for multiple parties, aimed to ensure privacy, and employed additive HE operation of the Paillier cryptosystem. However, it had compromised the data integrity due to the trivial use of HE. Besides, for encryption-decryption operations, the secret decryption key was possessed only by a single entity and did not consider any form of mix-net. Thereby, possibly the datasets can be modified by unfair entities. These deteriorate the practicality as well as efficiency of the framework. Another skyline framework proposed in [9] executed computation for two parties and was possible to extend into a multi-party platform. Here, the dominance relationship was computed by comparing two individual parties' objects. It developed a protocol named 'Efficient Secure Vector Comparison (ESVC)'. This protocol did not disclose the object's attributes to one another but revealed the dominance relationship between two specific objects. The framework proposed in [13] made a ranking of the attribute value on each dimension of data and used this rank for computation. Still, there exists suspicion that whether the attributes' rank of the objects can ensure privacy or not. Frameworks proposed in [3, 6, 8] used the data provider which could not know the user's dynamic skyline query. Also, the user could not know the entire private database of the data provider other than the skyline result. An important criterion was most of them included a semi-honest third party to conduct the privacy-preserving skyline query. But it is challenging to assume an unbiased third party as it may involve in the conspiracy. The framework proposed in [1] employed a secure multi-party sorting protocol and semi honest adversary model. Here, it preserved the order of each attribute for transforming the attribute value of the objects. Different from existing works, the proposed framework encompasses privacy and data integrity altogether. It attaches encrypted UTs with each participant's encrypted datasets individually. Thereby, for illegal benefit, if any dishonest entity attempts to breach the data integrity, the dishonesty is finally revealed from disclosed datasets. Also, to maintain sufficient privacy, it considers no trustworthy entities, i.e. trust (secret keys) is distributed among multiple authorities by adopting mix-net consists of at least two mix-nodes.

III. Preliminaries

Major cryptographic tools required to develop the framework are as below. In the following, it is assumed that there exists a mix-net consists of P (≥ 2) mix-nodes and the system manager SB is a representative of the mix-net. A.

ElGamal Cryptosystem ElGamal cryptosystem [15] comprises key generation, encryption, and decryption operations. Here, the sender encrypts its message m and sends it to the receiver. 1) Key generation: The receiver generates a large prime number p and a generator g of the multiplicative group Zp* of the integers modulo p. Now, it picks a random integer X (1 < X < p–2) and computes Y = gX mod p. Then, it keeps (X) as the private key and publishes (p, g, Y) as the public key. 2) Encryption: To encrypt m (0 < m < p–1), the sender selects a secret random integer k (1 < k < p–2) and uses the public key (p, g, Y) to compute y1 = g*k* mod p and y2 = m.Y*k* mod p. Now, it sends EY(k, m) = (y1, y2) as its encrypted message to the receiver. 3) Decryption: To retrieve the message m from EY(k, m), the receiver uses its private decryption key X and computes m = y2 × (y1X)–1 mod p. B. Commutative encryption, re-encryption and verification The mix-net can be implemented through commutative encryption technique [4] where it is assumed that the mix-net comprises of P (≥ 2) mix-nodes M1, …, MP. In the previous section as p and g are defined, Xi and Yi = gXi (mod p) are secret and public keys of each mix-node Mi (1 < i ≤ P). Now by involving multiple independent mix-nodes, the combined encryption key Y* is calculated as Y* = Y1Y2 … YP (mod p) = gX1+…+XP (mod p). By using Y*, the encryption of message m is EY*(k, m), i.e. it is identical to the encryption mechanism of section III (A). In the following, notation (mod p) is omitted. Later on, M1, …, MP conduct the re-encryption operation over EY*(k, m) as follows. • The first mix-node M1 obtains EY*(k, m) = {g*k*, m.Y**k*} as the input. • By using its secret integer kh (h ∈ {1, …, i}), consecutively i-th Mi calculates EY*(k + (∑ = i h m) = {(g*k*. (∑ = i h kh 1 g)), (m.Y**k*. (∑ = i h kh Y), 1 k h 1 *))} and every Mi shuffles the results. • Thus, lastly MP produces EY*(k*, m) = {(g*k*.g(k1+…+*k*P)), (m.Y**k*.Y* (*k*1+…+*k*P))} where k* = k+k1+…+kP. • Finally, while decryption, M1, …, MP decrypt EY*(k*, m) repeatedly by using X1, …, XP which is analogous to the decryption mechanism of section III (A). The following procedure shows – encrypted UTs (described in section III (C)) attached with participants' datasets, confirms data integrity as well as makes mix-net verifiable without verifying individual mix-nodes. Here, SB calculates data-pairs by Cartesian product operation of each two participant's datasets {it will be discussed in (step e) of section IV (C) (3)}. Before this operation, each PAn joins UTs with its datasets individually. • Each PAn encrypts it's every dataset, then joins a UT, i.e. EY*(r*n, Un) with it through HE. • Now, through the re-encryption process told above, M1, …, MP re-encrypt the encrypted data-pairs and UTs along with shuffling, to make them anonymized. • Later on, M1, …, MP repeatedly decrypt each re encrypted data-pair while required. Here, no one can link between encrypted and re encrypted pair-wise datasets due to shuffling. Again, by dividing the data-pair of each PAn by the UT assigned to it previously, the actual dataset is regained. Thus, the honesty mod p. Then, it keeps (X) as the private key and publishes (p, g, Y) as the public key. 2) Encryption: To encrypt m (0 < m < p–1), the sender selects a , it keeps (X) as the private key and publishes (p, g, Y) as the public key. 2) Encryption: To encrypt m (0 < m < p–1), the sender selects a secret y1 = g*k* mod p and y2 = m.Y*k* mod p. Now, it sends EY(k, m) = (y1, y2) as its encrypted message to the receiver. 3) Decryption: To retrieve the message m from EY(k, m), the secret random integer k (1 < k < p–2) and uses the public key (p, g, Y) to compute y1 = g*k* mod p and y2 = m.Y*k* mod p. Now, it sends EYparticipant PAn to show its identity to the SB anonymously, the framework exploits the anonymous credential proposed in [14].

IV. System Model and Functional Roles

In this section, we present the system model and formal definition of the proposed ABC, including roles of each entity in ABC, syntax of ABC, workflow of ABC, threat model and security model.

A. Roles of each entity

The proposed ABC system comprises five primary entities: Client Company (CC), System Developer (SD), Service Provider (SP), System User (SU), and System (SYS).

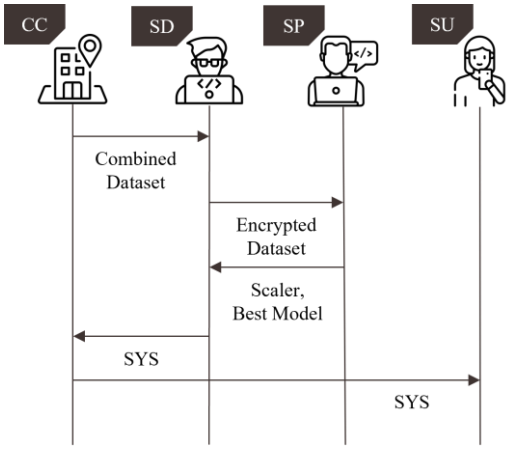

Fig. 1: Interactions between entities.

CC The CC collects datasets related to heart disease prediction from various hospitals and combines them. Since medical data is confidential, CC hands it over to SD for securing. After SD returns the SYS to CC, CC releases the SYS for use by SUs.

SD The SD generates public keys and encrypts the dataset using these keys to ensure its security. The encrypted dataset is then handed over to SP for model training. After SP provides the best ML model to SD, SD tests this model with actual data to verify its accuracy. If the model performs well, SD develops the SYS, which processes actual data to determine if the SU has heart disease, and hands it over to CC.

SP The SP receives the encrypted dataset from SD, preprocesses it, and trains several models. SP compares the AUC scores of different models and selects the one with the highest score. The trained model with the highest AUC score and the scaler for preprocessing are then handed over to SD.

SU The SU utilizes the SYS to benefit from the heart disease prediction model.

SYS The SYS, developed by SD, is designed to receive data

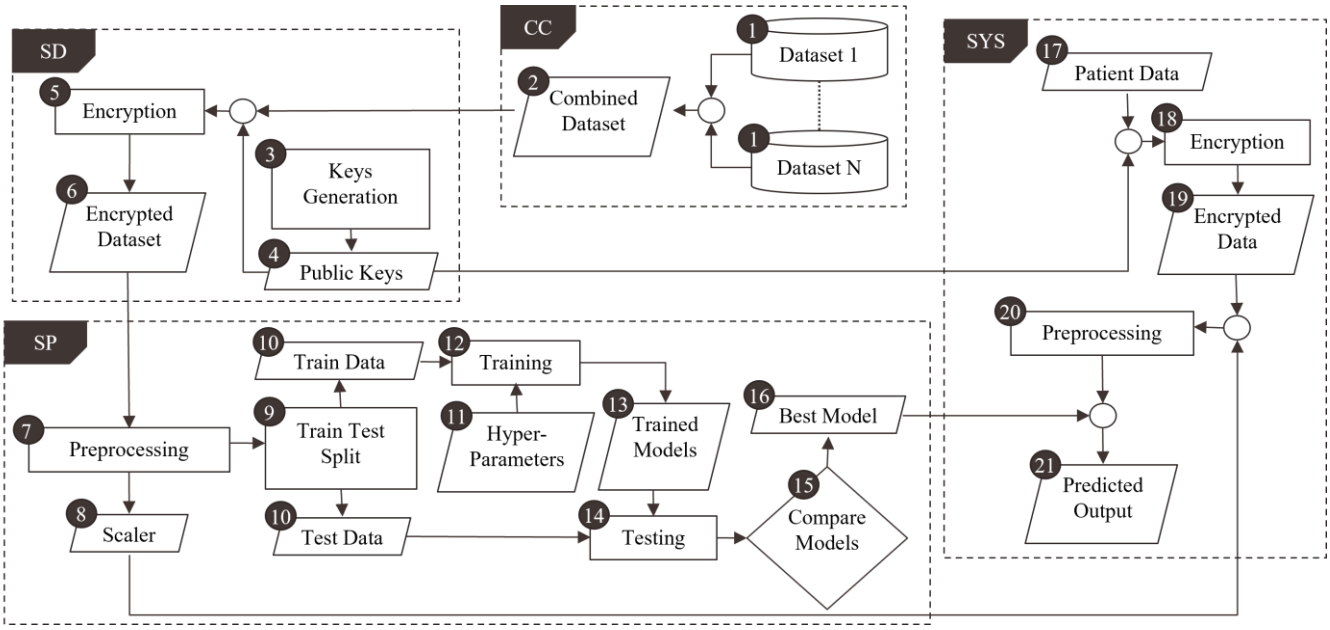

Fig. 2: The proposed block diagram of an automatic heart disease prediction.

from the SU. Using public keys, SYS encrypts this data, preprocesses it with the scaler, and predicts the outcome using the model provided by SP.

B. Syntax of ABC

Table 1: Notation Used

Symbol	**Description**
Δ_i	Set for a single raw dataset for heart disease prediction
d	No. of features
$\xi_i \in R^d$	Feature vector for the i-th data point
$\omega_i \in \Omega$	Value of the i-th feature
Ω	Set containing all possible value types
$\emptyset$	Missing value
Φ	Subset of features crucial
$\psi(\omega_i)$	Transformation function for categorical encoding consistency
E(.)	ElGamal encryption function
κ_i	Unique public key for feature i (fixed_key$_i$, q_i, h_i, g_i)
C_i	Encrypted version of ξ_i
c_{ij}	Encrypted value of j-th element in ξ_i
λ	Label value (Categorial)
λ'	Encoded label value
Θ	$\Theta = \{C_1, C_2, ..., C_{11}, \lambda'\}$
Z_i	Standardized version of C_i
M	Machine learning models
$\{M_1, ..., M_5\} \in M$	{NB, DT, RF, k-NN, SVC}
$M_\alpha \in M$	Top performing model 1
$M_\beta \in M$	Top performing model 2
$M_\gamma \in M$	Best performing model
Π	Set of performance metrics
$\{\Pi_1, ..., \Pi_6\} \in \Pi$	{Confusion Matrix, Accuracy, Precision, Sensitivity, F1-score, Specificity}
τ	Ratio of training data size (0.1 to 0.9)
S	Scaler used for standardization

C. Individual Stages

The proposed framework consists of five distinct stages. These are: (1) Data Collection, (2) Data Encryption, (3) Data Preprocessing, (4) Data anonymization and result revelation, and (5) mismatch detection. They are explained below.

1. Data Collection

CC assembles $\Delta_1, \Delta_2, ..., \Delta_N$, acquired from various hospitals. These Δ_i exhibit inconsistencies. There are some $\emptyset \in \Delta_i$. Some Δ_i encompass irrelevant features beyond those necessary for prediction. Feature values are numerical and categorical and some are encoded differently across Δ_i.

To ensure uniformity and facilitate data processing, CC undertakes some pre-processing steps. Only $\Phi \subset \{\xi_i\}$ are retained. Irrelevant features are discarded. Encoded values are transformed using $\psi(\omega i)$ to ensure consistent representation within the set Ω. For instance, ψ converts all instances of a specific numerical encoding for a category into a designated categorical value. The pre-processed Δ_i are merged into a single, unified dataset $\Delta = \bigcup_{i=1}^{N} \Delta_{i'}$, where $\Delta_{i'}$ represents the pre-processed version of Δ_i. Δ is then transmitted to SD to ensure confidentiality. Δ has following attributes:

Attribute	**Unit**	**Type of Data**
Age	Numeric	In Years
Sex	Nominal	1. Male 2. Female
Chest Pain Type	Nominal	1. Typical Angina 2. Atypical Angina 3. Non-anginal Pain 4. Asymptomatic
Resting Blood Pressure	Numeric	94-200 (mm HG)
Cholesterol	Numeric	126-564 (mg/dl)

Fasting Blood Sugar	Binary	Yes / No > 120 mg/dl
Resting ECG	Nominal	1. Normal 2. Abnormal ST-T Wave 3. Left Ventricular Hypertrophy
Maximum Heart Rate	Numeric	71-202
Exercise Angina	Binary	Yes / No
Oldpeak	Numeric	0 - 6.2
ST Slope	Nominal	1. Upsloping 2. Flat 3. Downsloping
Heart Disease	Binary	Yes / No

2. *Data Encryption*

SD utilizes the E(.) to safeguard Δ. Δ encompasses 11 ξ along with a λ. To ensure security, SD generates a κ_i = (fixed_key$_i$, q_i, h_i, g_i), for each individual feature i (i = 1, 2, ..., 11). This unique κ assignment is crucial because employing a single, identical κ for all ξ would lead to predictable data. With identical κ_i, encryption would result in the same c_{ij} for identical ω_i across various ξ, compromising data security.

E(.) transforms each ω_i into c_{ij} using the corresponding κ_i and E(.).These values are moded by a large prime number to ensure they remain integers suitable for machine learning algorithms. For λ, SD uses a simple binary encoding scheme λ'. λ' along with C_i are transmitted to the SP for training.

3. *Data Preprocessing*

SP addresses ∅ within the Θ. This is achieved by imputing the mean value for each C_i in Θ. Subsequently, C_i undergo standardization using the StandardScaler technique to get Z_i.

Standardization, $Z_i = \frac{c_i - \mu_C}{\sigma_C}$, where,

Mean, $\mu_C = \frac{1}{d}\sum_{j=1}^{d} c_{ij}$, and,

Standard Deviation, $\sigma_C = \sqrt{\frac{1}{d}\sum_{j=1}^{d} (c_{ij} - \mu_C)^2}$

4. *Model Training*

SP partitions Θ into Θ_{train} and Θ_{test} following a 7:3 ratio. Subsequently, SP evaluates the performance of a selection of M = {M_1, M_2, ..., M_5}. These models are selected due to their ability to handle categorical data and their potential to function without requiring decrypted features. For each model M_i, SP calculates Π = {Π_1, Π_2, ..., Π_6}. Furthermore, SP performs hyperparameter optimization, specifically focusing on the "random_state" parameter, to maximize Π_5 for each model M_i. Finally, based on the achieved Π_5, SP selects the two top-performing models M_α and M_β for further evaluation and potential hyperparameter tuning.

5. *Model Optimization*

SP conducts a more in-depth evaluation on M_α and M_β. These models possess the optimal hyperparameters that yielded the highest Π_5. SP employs three additional techniques for analysis: PCA, IF, and LSTM.

Additionally, SP investigates the impact of τ on model performance. For both M_α and M_β, SP calculates Π_5 across various τ. These sizes range from 10% (τ = 0.1) to 90% (τ = 0.9) of Θ.

6. *Final Model Selection*

SP conducts a comprehensive evaluation on eight different model configurations: M_α, M_α incorporating PCA, M_α incorporating IF, M_α incorporating LSTM, M_β, M_β incorporating PCA, M_β incorporating IF, and M_β incorporating LSTM. For each configuration, SP calculates the average Π_5 (Π_5') across various τ, ranging from 10% (τ = 0.1) to 90% (τ = 0.9) of Θ. Finally, SD selects M_γ that achieves the highest Π_5'. M_γ along with S is finalized and delivered back to the SD.

7. *Model Verification*

SD performs a validation step to verify the effectiveness of M_γ. SD identifies a subset of rows (C_1, C_2, ..., C_k) from Θ. Here, ∅ ∉ C_{ij} for all i from 1 to k and j from 1 to d. For each C_i, SD utilizes S to get Z_i, and M_γ to predict the corresponding λ_i'.

Based on (C_1, C_2, ..., C_k) from Θ, the SD identifies the corresponding rows (ξ_1, ξ_2, ..., ξ_k) from Δ. For each selected ξ_i, ξ_i are encrypted using the corresponding κ_i to generate C_i. Subsequently, SD utilizes S to get Z_i, and M_γ to predict λ_i' for these Z_i.

SD compares λ_i' obtained from both the Θ and Δ. If λ_i' is the same for both Θ and Δ, it signifies that M_γ and S function correctly while maintaining data security. In this case, SD proceeds with system development using M_γ and S. Conversely, if any inconsistencies arise in λ_i', it suggests potential issues with M_γ or S. SD then returns Θ to the SP for further investigation.

8. *System Development*

SD delivers a user-friendly interface for SU interaction. This interface features input fields corresponding to each of the d features (ξ_i) within the model, where SU enters their data directly into these fields. The system then encrypts ξ_i using the corresponding κ_i to generate C_i. This C_i undergoes processing through S for standardization to get Z_i. Subsequently, M_γ leverages Z_i to predict λ_i'. Once complete, the SD delivers the finalized system to CC for broadcasting, making it readily available for SU.

V. RESULTS

In this section,

Classifier / Matric	NB	DT	RF	k-NN	SVM
Confusion Matrix *TP FP* *FN TN*	367 173 110 564	516 49 64 585	482 30 42 660	377 151 128 558	377 143 87 607
Accuracy $\frac{TP+TN}{TP+TN+FP+FN}$	0.77	0.91	0.94	0.77	0.81

Precision $\frac{TP}{TP+FP}$	0.77	0.92	0.96	0.79	0.81
Recall $\frac{TP}{TP+FN}$	0.84	0.90	0.94	0.81	0.87
F1-Score $\frac{2*Precision*Recall}{Precision+Recall}$	0.80	0.91	0.95	0.80	0.84
Specificity $\frac{TN}{TP+FP}$	0.68	0.91	0.94	0.71	0.72

Classifier	Hyper-parameters			Train Size									Mean
				0.1	0.2	0.3	0.4	0.5	0.6	0.7	0.8	0.9	
DT	Data Splitting (train_test_split) • random_state: 4749	DecisionTreeClassifier • random_state: 436		0.76	0.81	0.83	0.85	0.88	0.90	0.91	0.94	0.97	0.87
DT PCA	Data Splitting (train_test_split) • random_state: 1418	PCA • n_components: 9	DecisionTreeClassifier • random_state: 2066	0.73	0.75	0.78	0.81	0.83	0.85	0.87	0.88	0.92	0.82
DT Isolation	Data Splitting (train_test_split) • random_state: 2009	IsolationForest: • n_estimators: 173 • contamination: 0.08 • random_state: 2009 • max_samples: 1	DecisionTreeClassifier • random_state: 2009 • criterion: gini	0.79	0.80	0.81	0.85	0.89	0.90	0.90	0.92	0.93	0.87
DT LSTM	Data Splitting (train_test_split) • random_state: 274	Optimizer (Adam) • learning_rate: ~0.1429 (1/7)	Model Training (model.fit) • epochs: 47 • batch_size: 10000 • verbose: 0	0.74	0.78	0.79	0.82	0.84	0.85	0.87	0.87	0.86	0.82
	Sequential Dropout • rate: 0.04 Dense • units: 1 • activation: sigmoid	Model Compilation (model.compile) • loss: binary_crossentropy	DecisionTreeClassifier • random_state: 274										
RF	Data Splitting (train_test_split) • random_state: 1694 • n_estimators: 95	RandomForestClassifier • random_state: 1694		0.83	0.85	0.88	0.91	0.93	0.94	0.94	0.95	0.96	0.91
RF PCA	Data Splitting (train_test_split) • random_state: 983	PCA • n_components: 9	RandomForestClassifier • random_state: 983 • n_estimators: 91	0.79	0.83	0.85	0.87	0.89	0.91	0.92	0.93	0.93	0.88
RF Isolation	Data Splitting (train_test_split) • random_state: 1341	IsolationForest: • n_estimators: 26 • contamination: 0.01 • random_state: 530 • max_samples: 105	RandomForestClassifier • random_state: 530 • n_estimators: 63 • criterion: gini	0.83	0.85	0.88	0.91	0.93	0.94	0.94	0.96	0.96	0.91
RF LSTM	Data Splitting (train_test_split) • random_state: 47	Optimizer (Adam) • learning_rate: ~0.0667 (1/15)	Model Training (model.fit) • epochs: 107 • batch_size: 10000 • verbose: 0	0.74	0.80	0.80	0.82	0.84	0.86	0.88	0.88	0.90	0.83
	Sequential Dropout • rate: 0.05 Dense • units: 1 • activation: sigmoid	Model Compilation (model.compile) • loss: binary_crossentropy	RandomForestClassifier • random_state: 47 • n_estimators: 47										

VI. Limitations and Future Works

A. Limitations

Centralization: While the system utilizes local and international miners for transaction processing, the central authority still holds significant power. This includes account management (banning, freezing, reactivation), transaction oversight (rejection, reversal), and reward system adjustments. This centralization could raise concerns about censorship, manipulation, and potential single point of failure.

Privacy: While user transaction details (amount, fees, public key) are encrypted, the system still requires location tracking during account creation and potentially for KYC verification. This raises privacy concerns for users who might not be comfortable with such tracking.

B. Future Works:

Decentralized Account Management: Explore mechanisms for decentralized account management that reduce reliance on the central authority. This could involve implementing smart contracts for automated account creation and management based on pre-defined rules.

Scalable Data Storage: Investigate alternative data storage solutions like sharding or directed acyclic graphs (DAGs) to reduce storage requirements for individual users while maintaining data integrity.

Enhanced Privacy: Explore privacy-preserving techniques like zero-knowledge proofs or ring signatures to further protect user transaction details without compromising transaction validity.

VII. Conclusion

BCT is a novel design for a blockchain-based transaction system that supports permissionless blockchain technology for domestic transactions and a consortium blockchain for international transactions. The system incorporates a decentralized network of local and international miners to ensure efficient transaction processing and security. To

safeguard against unauthorized activities, the system implements a robust account creation process with KYC verification and utilizes encryption to protect user privacy.

BCT offers several advantages over traditional transaction systems. The decentralized nature fosters transparency and reduces reliance on centralized authorities. The permissionless blockchain for domestic transactions empowers users with greater control over their finances. Furthermore, the consortium blockchain for international transactions ensures secure and compliant cross-border payments.

The security analysis demonstrates the system's resilience against unauthorized account creation, transaction manipulation, and double-spending. The performance analysis reveals promising results, with efficient transaction processing times for account creation, transaction initiation, block acceptance, and transaction verification.

While the current design incorporates a central authority for account management, transaction oversight, and reward system adjustments, future work will explore mechanisms for decentralized account management through the implementation of smart contracts. Additionally, we will investigate alternative data storage solutions to reduce storage requirements for individual users while maintaining data integrity. Finally, we will explore privacy-preserving techniques to further protect user transaction details without compromising transaction validity.

Overall, this blockchain-based transaction system offers a secure, transparent, and efficient framework for domestic and international transactions, paving the way for a future of decentralized finance.

II. References

[1] C. Lin, D. He, X. Huang, M. K. Khan, and K.-K. R. Choo, "DCAP: A secure and efficient decentralized conditional anonymous payment system based on blockchain," IEEE Trans. Inf. Forensic Security, vol. 15, pp. 2440–2452, 2020.

[2] Y. Chen, X. Ma, C. Tang, and M. H. Au, "PGC: Decentralized confidential payment system with auditability," in Proc. Eur. Symp. Res. Comput. Secur., 2020, pp. 591–610

[3] J. Partala, T. H. Nguyen, and S. Pirttikangas, "Non-interactive zero-knowledge for blockchain: A survey," IEEE Access, vol. 8, pp. 227945–227961, 2020.

[4] W. Li, Y. Wang, L. Chen, X. Lai, X. Zhang, and J. Xin, "Fully auditable privacy-preserving cryptocurrency against malicious auditors," Cryptol. ePrint Arch., 2019. [online]. Available: https:// eprint.iacr.org/2019/925.pdf

[5] E. Androulaki, J. Camenisch, A. D. Caro, M. Dubovitskaya, K. Elkhiyaoui, and B. Tackmann, "Privacy-preserving auditable token payments in a permissioned blockchain system," in Proc. 2nd ACM Conf. Adv. Financial Technol., 2020, pp. 255–267.

[6] Z. Fu, P. Dong, S. Li, and Y. Ju, "An intelligent cross-border transaction system based on consortium blockchain: A case study in Shenzhen, China," PLoS One vol. 16, no. 6, Jun. 2021, Art. no. e0252489.

[7] P. Chatzigiannis and F. Baldimtsi, "MiniLedger: Compact-sized anonymous and auditable distributed payments," in Proc. Eur. Symp. Rese. Comput. Secur., 2021, pp. 407–429.

[8] Y. Yorozu, M. Hirano, K. Oka, and Y. Tagawa, "Electron spectroscopy studies on magneto-optical media and plastic substrate interfaces (Translation Journals style)," IEEE Transl. J. Magn.Jpn., vol. 2, Aug. 1987, pp. 740–741 [Dig. 9th Annu. Conf. Magnetics Japan, 1982, p. 301.

[9] M. Young, *The Techincal Writers Handbook.* Mill Valley, CA: University Science, 1989.

[10] J. U. Duncombe, "Infrared navigation—Part I: An assessment of feasibility (Periodical style)," *IEEE Trans. Electron Devices*, vol. ED-11, pp. 34–39, Jan. 1959.

[11] S. Chen, B. Mulgrew, and P. M. Grant, "A clustering technique for digital communications channel equalization using radial basis function networks," *IEEE Trans. Neural Networks*, vol. 4, pp. 570–578, Jul. 1993.

[12] R. W. Lucky, "Automatic equalization for digital communication," *Bell Syst. Tech. J.*, vol. 44, no. 4, pp. 547–588, Apr. 1965.

[13] S. P. Bingulac, "On the compatibility of adaptive controllers (Published Conference Proceedings style)," in *Proc. 4th Annu. Allerton Conf. Circuits and Systems Theory*, New York, 1994, pp. 8–16.

[14] G. R. Faulhaber, "Design of service systems with priority reservation," in *Conf. Rec. 1995 IEEE Int. Conf. Communications*, pp. 3–8.

[15] W. D. Doyle, "Magnetization reversal in films with biaxial anisotropy," in *1987 Proc. INTERMAG Conf.*, pp. 2.2-1–2.2-6.

[16] G. W. Juette and L. E. Zeffanella, "Radio noise currents n short sections on bundle conductors (Presented Conference Paper style)," presented at the IEEE Summer power Meeting, Dallas, TX, Jun. 22–27, 1990, Paper 90 SM 690-0 PWRS.

[17] J. G. Kreifeldt, "An analysis of surface-detected EMG as an amplitude-modulated noise," presented at the 1989 Int. Conf. Medicine and Biological Engineering, Chicago, IL.

[18] J. Williams, "Narrow-band analyzer (Thesis or Dissertation style)," Ph.D. dissertation, Dept. Elect. Eng., Harvard Univ., Cambridge, MA, 1993.

[19] N. Kawasaki, "Parametric study of thermal and chemical nonequilibrium nozzle flow," M.S. thesis, Dept. Electron. Eng., Osaka Univ., Osaka, Japan, 1993.

[20] J. P. Wilkinson, "Nonlinear resonant circuit devices (Patent style)," U.S. Patent 3 624 12, July 16, 1990.

[21] *IEEE Criteria for Class IE Electric Systems* (Standards style), IEEE Standard 308, 1969.

[22] *Letter Symbols for Quantities*, ANSI Standard Y10.5-1968.

[23] R. E. Haskell and C. T. Case, "Transient signal propagation in lossless isotropic plasmas (Report style)," USAF Cambridge Res. Lab., Cambridge, MA Rep. ARCRL-66-234 (II), 1994, vol. 2.

[24] E. E. Reber, R. L. Michell, and C. J. Carter, "Oxygen absorption in the Earth's atmosphere," Aerospace Corp., Los Angeles, CA, Tech. Rep. TR-0200 (420-46)-3, Nov. 1988.

[25] (Handbook style) *Transmission Systems for Communications*, 3rd ed., Western Electric Co., Winston-Salem, NC, 1985, pp. 44–60.

[26] *Motorola Semiconductor Data Manual*, Motorola Semiconductor Products Inc., Phoenix, AZ, 1989.

[27] (Basic Book/Monograph Online Sources) J. K. Author. (year, month, day). *Title* (edition) [Type of medium]. Volume (issue). Available: http://www.(URL)

[28] J. Jones. (1991, May 10). Networks (2nd ed.) [Online]. Available: http://www.atm.com

[29] (Journal Online Sources style) K. Author. (year, month). Title. *Journal* [Type of medium]. Volume(issue), paging if given. Available: http://www.(URL)

[30] R. J. Vidmar. (1992, August). On the use of atmospheric plasmas as electromagnetic reflectors. *IEEE Trans. Plasma Sci.* [Online]. *21(3).* pp. 876–880. Available: http://www.halcyon.com/pub/journals/21ps03-vidmar