جامعة عين شمس
كلية الهندسة

isReferee
Android App

JANUARY 9, 2021

AIN SHAMS UNIVERSITY – FACULTY OF ENGINEERING

AIN-SHAMS UNIVERSITY

FACULTY OF ENGINEERING

CSE 430: ADVANCED MOBILE COMPUTING

isReferee

Name: **Abdelrahman Amr El-Sayed Mohamed Issawi**

ID: **16P6001**

Email: **aid-issawi@hotmail.com**

Submitted to:

Dr. Haytham Azmi.

Eng. Fatema Mahmoud

JANUARY 9, 2021

A report for Selected Topics Course codded CSE430 with the requirements of

Ain Shams University.

Table of Contents

INTRODUCTION

I am interested in improving my sport, which is Modern Pentathlon. In this application, I am focusing on presenting a solution for the swimming event.
The goal is to automate the process and minimize human interaction and redundant work which is too much.
I'll show a little demo to clarify my concept and the old scenario before automating and improving it.
Let's imagine having 4 lanes swimming pool and 40 players in the championship. Then we are going to distribute them to 10 heats "Groups" each group contains 4 players. And now starting with heat number 1. The first 4 players start swimming when the referee says "Heat Number 1, Take your mark, start" and this referee uses the start equipment in the below figure.
The lane referee starts the stopwatch time and the global stopwatch displayed to the public is started "Scoreboard", when the swimmers arrive the lane referee stops the stopwatch time and whenever a swimmer touches the lane **touchpad** the record is automatically printed to a paper and the referee write his time on another paper then one referee compares both records, and if matched another referee write these records in the web application or the database.

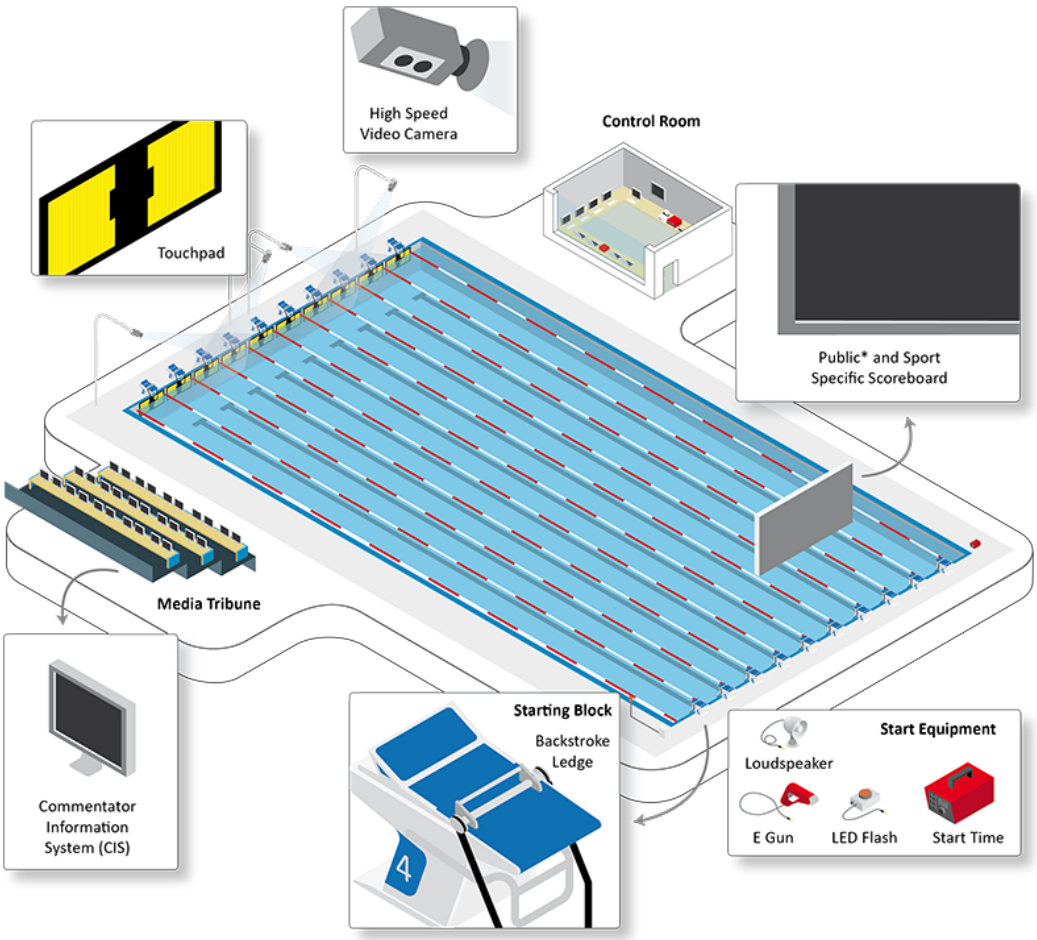

Old Scenario Disadvantages

The main issue is the redundant work both the lane referee and the system produce times and the comparison process and then the writing process. This is time-consuming. Also, many humans are involved.

Proposed Solution

My proposed solution is to overcome this and directly save time to the database. Decreasing the cost, human interaction, and the time.

And this would happen either by updating the infrastructure to navigate the records to the database instead of printing it, but this is a legacy system and hard to manipulate.

Or, we can provide an internet connection and when the touchpad is touched an interrupt is triggered, so a value associated with the lane in the Realtime database is changed so the app listens to the change and updated the database, and the display scoreboard.

For the second solution, I only need a mobile app that will start the Heat, switch heats, receive records, saves them, and I added an option to retrieve a specific time.

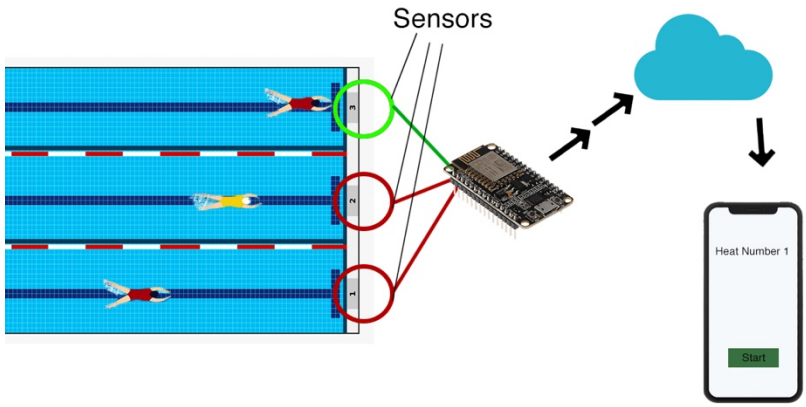

DATABASE

I used Room Database, Saving the Heat Number, Lane Number, and the time associated with them.

```
@Entity(tableName = "recordsTable", primaryKeys = {"HeatNumber","LaneNumber"})
    public class Record {
        @NonNull @ColumnInfo(name = "HeatNumber")
        public int HeatNum;

        @NonNull @ColumnInfo(name = "LaneNumber")
        public String LaneNum;

        @NonNull @ColumnInfo(name = "Record")
        public String Record;

        public Record(@NonNull int HeatNum, @NonNull String LaneNum, @NonNull
    String Record) {
            this.HeatNum = HeatNum;
            this.LaneNum = LaneNum;
            this.Record = Record;
        }
        public int getHeatNumber(){return this.HeatNum;}
        public String getLaneNumber(){return this.LaneNum;}
        public String getRecord(){return this.Record;}
}
```

HARDWARE

Circuit

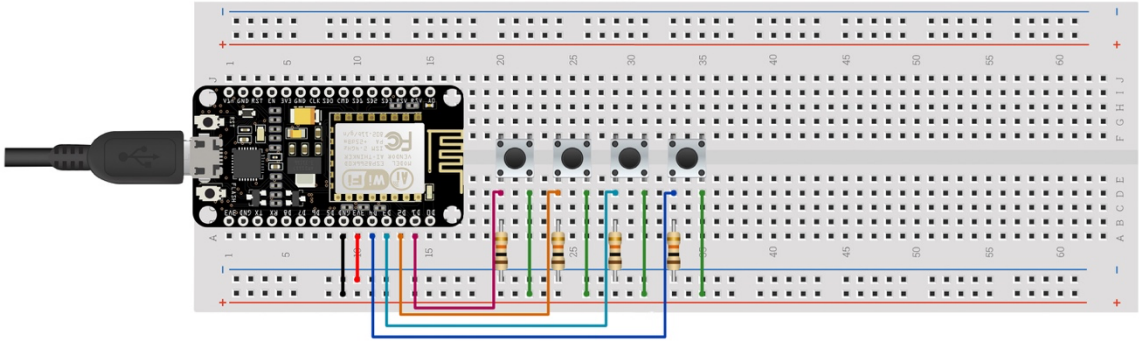

Code

```
#include <ESP8266WiFi.h>
#include <FirebaseArduino.h>

#define WIFI_SSID "doda"
#define WIFI_PASSWORD "@170570r"
#define FIREBASE_HOST "isreferee-5a163-default-rtdb.firebaseio.com"
#define FIREBASE_AUTH "NZwshtu141DeKMPzueCdDZu8ef5OPiJpraBXdSmi"

uint8_t GPIO_Pin1 = D1;
uint8_t GPIO_Pin2 = D2;
uint8_t GPIO_Pin3 = D3;
uint8_t GPIO_Pin4 = D4;

int switchOneState = 0;
int switchTwoState = 0;
int switchThreeState = 0;
int switchFourState = 0;

void ICACHE_RAM_ATTR IntCallback1 ();
void ICACHE_RAM_ATTR IntCallback2 ();
void ICACHE_RAM_ATTR IntCallback3 ();
void ICACHE_RAM_ATTR IntCallback4 ();

void setup() {
 Serial.begin(9600);
 pinMode(GPIO_Pin1, INPUT);
 pinMode(GPIO_Pin2, INPUT);
 pinMode(GPIO_Pin3, INPUT);
 pinMode(GPIO_Pin4, INPUT);

 attachInterrupt(digitalPinToInterrupt(GPIO_Pin1), IntCallback1, HIGH);
 attachInterrupt(digitalPinToInterrupt(GPIO_Pin2), IntCallback2, HIGH);
 attachInterrupt(digitalPinToInterrupt(GPIO_Pin3), IntCallback3, HIGH);
 attachInterrupt(digitalPinToInterrupt(GPIO_Pin4), IntCallback4, HIGH);

 // connect to wifi.
  WiFi.begin(WIFI_SSID, WIFI_PASSWORD);
  Serial.println();
  Serial.print("connecting to WIFI");
  while (WiFi.status() != WL_CONNECTED) {
    Serial.print(".");
    delay(500);
  }
  Serial.println();
  Serial.print("connected: ");
  Serial.println(WiFi.localIP());

  Firebase.begin(FIREBASE_HOST, FIREBASE_AUTH);

}
```

```
void loop() {
  if(switchOneState == 1) {
    switchOneState = 0;
    Serial.println("switch 1 pressed");
    if(WiFi.status() == WL_CONNECTED) {
      Firebase.setString("lane1", "1");
    }else{
      Serial.println("FAILED");
    }
  }
  if(switchTwoState == 1) {
    switchTwoState = 0;
    Serial.println("switch 2 pressed");
    if(WiFi.status() == WL_CONNECTED){
      Firebase.setString("lane2", "1");
    }else{
      Serial.println("FAILED");
    }
  }
  if(switchThreeState == 1) {
    switchThreeState = 0;
    Serial.println("switch 3 pressed");
    if(WiFi.status() == WL_CONNECTED){
      Firebase.setString("lane3", "1");
    }else{
      Serial.println("FAILED");
    }
  }
  if(switchFourState == 1) {
    switchFourState = 0;
    Serial.println("switch 4 pressed");
    if(WiFi.status() == WL_CONNECTED){
      Firebase.setString("lane4", "1");
    }else{
      Serial.println("FAILED");
    }
  }
  delay(200);

}

void IntCallback1(){
 switchOneState = 1;
}

void IntCallback2(){
 switchTwoState = 1;
}

void IntCallback3(){
 switchThreeState = 1;
}

void IntCallback4(){
 switchFourState = 1;

}
```

VIEWS DESIGN

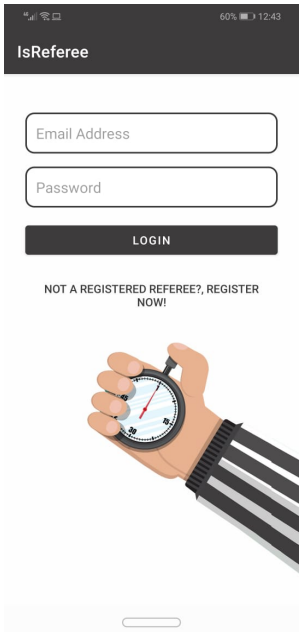

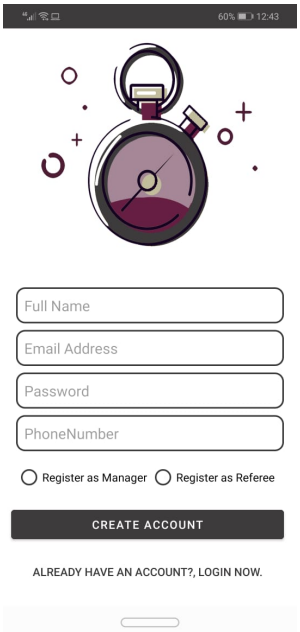

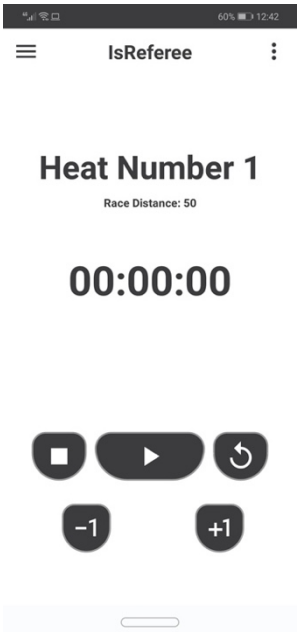

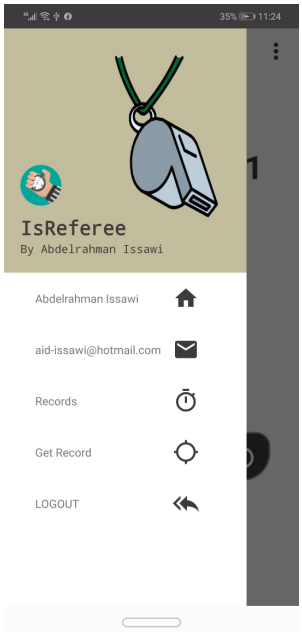

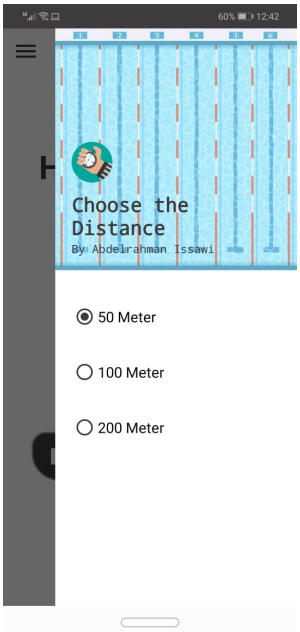

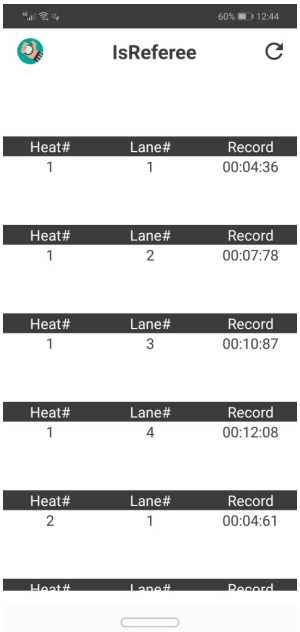

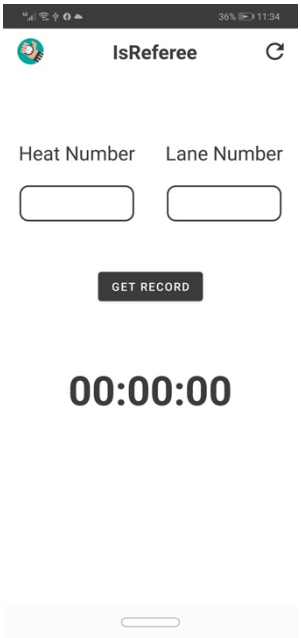

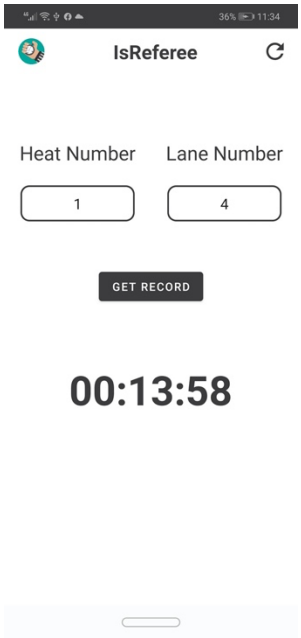

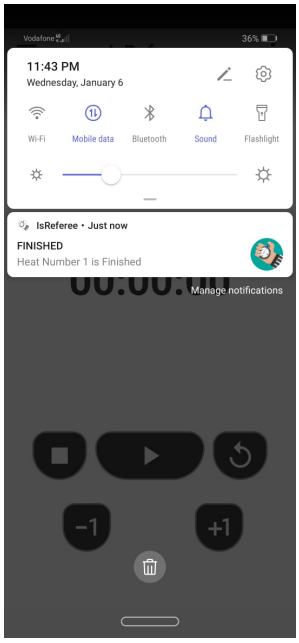

FEATURES

- **Text to Speech** to start the heat.
- **Notifications** to alert the referee when the heat is finished.
- **Async Task** implemented to retrieve records, delete, or insert.
- **Stopwatch** implementation to show the time.
- **Buttons** to start, stop, reset time, and increment or decrement heats.
- Android Architecture **MVVM** to organize the code.
- **Firebase Authentication** to register users and login.
- **Firestore** to save user's data.
- **Firebase Realtime database** to monitor hardware change.
- Users can retrieve any time by lane number and heat number.
- Used **customized** styles, not the default ones, designed the logos, edited the pictures I got.
- **Customized** toolbars.
- Used recycler views, and drawer layouts.
- Used **Live data** to show lanes changing, users, records.
- Used **NodeMCU** for the communication between hardware and firebase.
- Created the circuit demonstrating 4 lanes by **push buttons**.
- Instead of polling, I used **interrupts**.

TESTING SCENARIOS

Normal Sequence of Application

User Starts the app to register, enter valid information, and then click create an account. Navigates to the home screen where can start the time change the heat stop and reset.

The referee also can change the distance, open the records view after stopping the heat to see all records or open the get records view to get a specific record.

Odd Trials

Whenever the referee clicks the back button or any button except the stop one when the heat is running a toast will show up warning. The heat must be stopped to change the heat number or open the records panel or changing the distance, in the retrieval of specific records the odd entry numbers are handled.

When the button is clicked more than one time. The record is replaced, and this is a valid solution in my use case.

FIREBASE

Firebase Authentication

Search by email address, phone number, or user UID

Add user

Identifier	Providers	Created	Signed In	User UID
mohanad@gmail.com		Dec 15, 2020	Dec 16, 2020	21MNeWyTXbSNOfcF2CaStgXFXA...
omarali@gmail.com		Dec 15, 2020	Dec 16, 2020	8huujYzZarW7OKGu31ZHSa4siEf2
mohamed678140@gmail.com		Dec 31, 2020	Dec 31, 2020	IUat77F9wXg9VFDDZDpnq4BDHa03
zaid@gmail.com		Dec 19, 2020	Dec 19, 2020	SaBB871tBlX5Rp38dTaVrDVqqQi2
aid-issawi@hotmail.com		Dec 15, 2020	Jan 5, 2021	SbwmiThIQWVX8sCrIeKZ4FFFOb...
nada@gmail.com		Dec 18, 2020	Dec 18, 2020	bTfxXYj2Aihi2DSPiAzsFzcnEo53
aid.issawi@hotmail.com		Dec 15, 2020	Dec 15, 2020	eSjV23MQcmQ3zTeulqoY1LJeTtq1

Rows per page: 50 1 – 7 of 7

Cloud Firestore

Users > SbwmiThIQWVX...

isreferee-5a163

Start collection

Users

Users

Add document

21MNeWyTXbSNOfcF2CaStgXFXA02
6iHSAKyNRRWgChFmoudkbQbkvRG2
DPxfGhuVUsRS9WXpbM5YsVDelSh2
IUat77F9wXg9VFDDZDpnq4BDHa03
SaBB871tBlX5Rp38dTaVrDVqqQi2
SbwmiThIQWVX8sCrIeKZ4FFFObm2
bTfxXYj2Aihi2DSPiAzsFzcnEo53
eSjV23MQcmQ3zTeulqoY1LJeTtq1
frFf2BMjAuXu99qZw9zplP78ECM2

SbwmiThIQWVX8sCrIeKZ4FFFObm2

Start collection

Add field

FullName: "Abdelrahman Issawi "
PhoneNumber: "01093511759"
UserEmail: "aid-issawi@hotmail.com"
isAdmin: "1"

Realtime Database

https://isreferee-5a163-default-rtdb.firebaseio.com/

isreferee-5a163-default-rtdb

- **distance:** "50"
- **lane1:** "0"
- **lane2:** "0"
- **lane3:** "0"
- **lane4:** "0"
- **started:** "0"

Database location: United States (us-central1)

CODES SAMPLES

Model

Dao

```
@Dao
public interface RecordDao {
    @Insert(onConflict = OnConflictStrategy.REPLACE)
    void insert(Record record);

    @Query("DELETE FROM recordsTable")
    void deleteAll();

    @Delete()
    void delete(Record record);

    @Query("SELECT * from recordsTable ORDER BY HeatNumber, LaneNumber ASC")
    LiveData<List<Record>> getAllRecords();

    @Query("SELECT Record from recordsTable where HeatNumber = :number AND
LaneNumber = :lane")
    String getRecord(int number, int lane);
}
```

Repository Sample

```
public Repository(Application application) {
    RecordsRoomDatabase db = RecordsRoomDatabase.getDatabase(application);
    RecordDao = db.RecordDao();
    AllRecords = RecordDao.getAllRecords();
    this.application= application;
    userMutableLiveData = new MutableLiveData<>();

    lane1Data = new MutableLiveData<>();
    lane2Data = new MutableLiveData<>();
    lane3Data = new MutableLiveData<>();
    lane4Data = new MutableLiveData<>();
    startedData = new MutableLiveData<>();
    fAuth = FirebaseAuth.getInstance();
    fStore = FirebaseFirestore.getInstance();

    if(FirebaseAuth.getInstance().getCurrentUser() != null){
        userMutableLiveData.postValue(fAuth.getCurrentUser());}

    int theatNumber = 0;
    String tlaneNumber = "0";
    String ttime = "00:00:00";
    Record trecord = new Record(theatNumber, tlaneNumber, ttime);
    insert(trecord);
    delete(trecord);
}
```

Room Database Sample

```
public static RecordsRoomDatabase getDatabase(final Context context) {
    if (INSTANCE == null) {
        synchronized (RecordsRoomDatabase.class) {
            if (INSTANCE == null) {
                INSTANCE =
Room.databaseBuilder(context.getApplicationContext(),
                        RecordsRoomDatabase.class, "Records_database")
                        // Wipes and rebuilds instead of migrating
                        // if no Migration object.
                        // Migration is not part of this practical.
                        .fallbackToDestructiveMigration()
                        .addCallback(sRoomDatabaseCallback)
                        .build();
            }
        }
    }
    return INSTANCE;
}
```

View

Main Activity Sample

```
MainViewModel.getLane1Changing().observe(this, new Observer<String>() {
    @Override
    public void onChanged(String laneChange1) {

        if(laneChange1.equals("1") && isStarted)
        {
            lane1 = timer.getText().toString();
            Log.d("LANE1","------  " + lane1);
            int heatNumber = count;
            String laneNumber = "1";
            String time = lane1;
            Record record = new Record(heatNumber, laneNumber, time);
            MainViewModel.insert(record);
            MainViewModel.setLane1();
        }
        else if(laneChange1.equals("1") && !isStarted)
        {
            MainViewModel.setLane1();
        }

    }
});
```

Content Records Sample

```
RecordsViewModel = ViewModelProviders.of(this).get(ViewModel.class);
        RecordsViewModel.getAllRecords().observe(this, new
Observer<List<Record>>() {
            @Override
            public void onChanged(@Nullable final List<Record> records) {
                // Update the cached copy of the words in the adapter.
                adapter1.setRecords(records);

            }
        });
    }
```

Adapter Sample

```
  @Override
    public void onBindViewHolder(RecordViewHolder holder, int position) {
        //if ((Integer) position ==null ) position = 1;
        Log.d("TESTMVVM", "POSITION Record  " + position);
        if (Records != null) {

            Record current = Records.get(position);
            int heat = current.getHeatNumber();

holder.HeatNumber.setText(Integer.toString(current.getHeatNumber()));
            holder.LaneNumber.setText(current.getLaneNumber());
            holder.Record.setText(current.getRecord());

        } else {
            // Covers the case of data not being ready yet.
            holder.Record.setText("00");
        }
    }
```

View Model

View Model Sample

```
public ViewModel(Application application) {
    super(application);
    mRepository = new Repository(application);
    userMutableLiveData = mRepository.getUserMutableLiveData();

    lane1Data = mRepository.getLane1Changing();
    lane2Data = mRepository.getLane2Changing();
    lane3Data = mRepository.getLane3Changing();
    lane4Data = mRepository.getLane4Changing();
    startedData = mRepository.getStartedRef();

    AllRecords = mRepository.getAllRecords();
}
```

XML

Custom Styles Sample

```
<?xml version="1.0" encoding="utf-8"?>
<shape  xmlns:android="http://schemas.android.com/apk/res/android"
    android:shape="rectangle" android:padding="30dp">
    <solid android:color="#FFFFFF" />
    <stroke
        android:width="2dp"
        android:color="#3D3B3C"/>
    <corners
        android:bottomRightRadius="10dp"
        android:bottomLeftRadius="10dp"
        android:topLeftRadius="10dp"
        android:topRightRadius="10dp" />
</shape>
```

Custom Toolbar

```
<?xml version="1.0" encoding="utf-8"?>
<LinearLayout
    xmlns:android="http://schemas.android.com/apk/res/android"
    android:layout_width="match_parent"
    android:layout_height="wrap_content"
    android:orientation="horizontal"
    android:padding="12dp"
    android:gravity="center_vertical"
    >
    <ImageView
        android:layout_width="wrap_content"
        android:layout_height="wrap_content"
        android:onClick="ClickMenu"
        android:src="@drawable/menuicon"/>

    <TextView
        android:layout_width="0dp"
        android:layout_height="wrap_content"
        android:layout_weight="1"
        android:text="@string/app_name"
        android:textSize="24sp"
        android:textStyle="bold"
        android:textAlignment="center"
        android:textColor="#3D3B3C" />

    <ImageView
        android:layout_width="wrap_content"
        android:layout_height="wrap_content"
        android:onClick="ClickDistance"
        android:src="@drawable/moreicon"
        />
<!--    android:onClick="ClickDistance"-->
<!--    android:onClick="DistanceMenu"-->
</LinearLayout>
```

DEMO VIDEO

https://drive.google.com/file/d/1qR2-pANDOT6m8TsYfKHccZdrUytdLT_m/view?usp=sharing