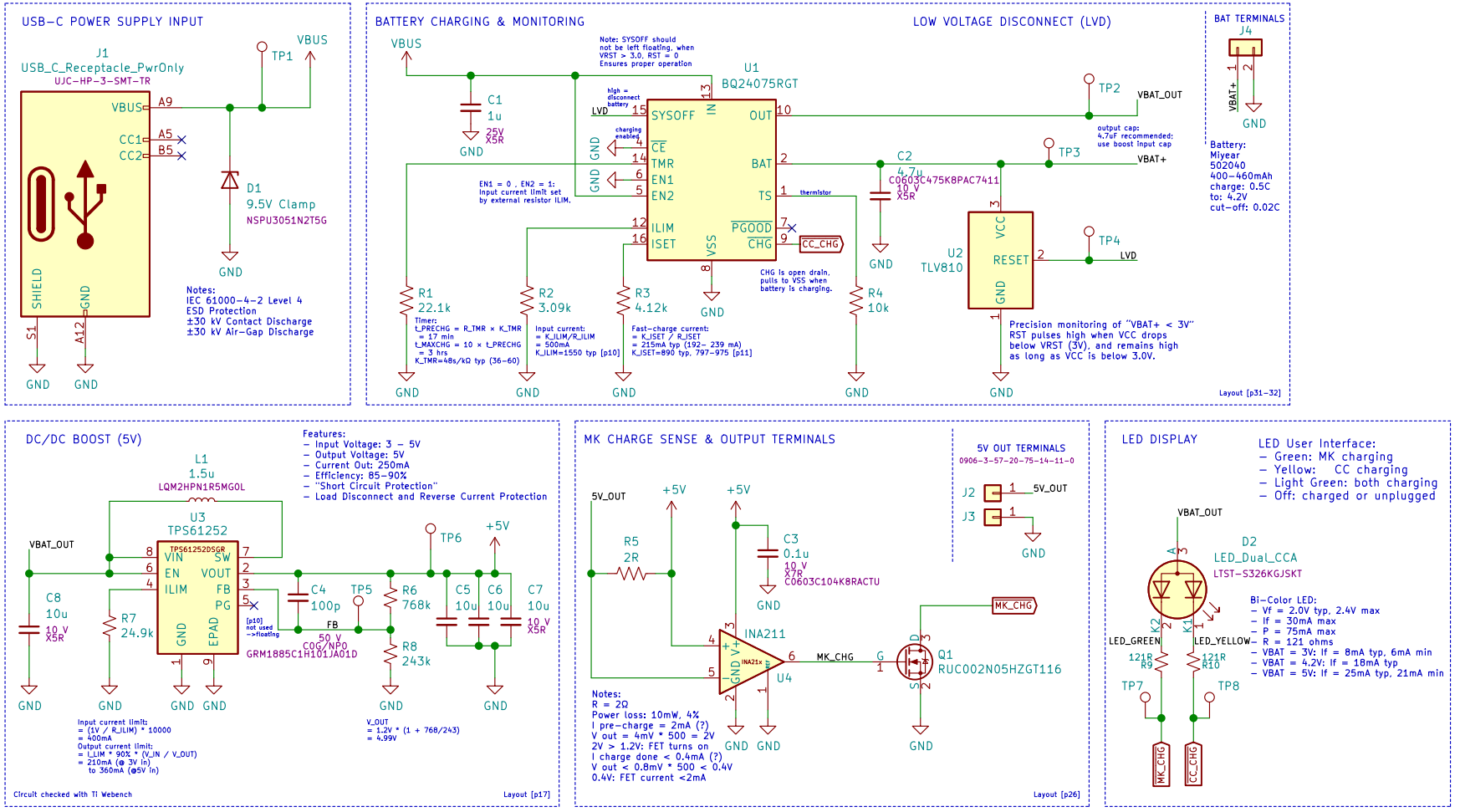

Brilliant Labs Limited
CC6
Designed by: N. Ashelman
Checked by: -

Sheet: /
File: CC6.sch

Title: CC6

Size: A4	Date: 2021-06-30	**Rev: 1.1.1**
KiCad E.D.A. kicad (5.1.6-0-10_14)		Id: 1/1