I&EC research
Industrial & Engineering Chemistry Research

Article

pubs.acs.org/IECR

Use of Mass or Molar Reflux-to-Feed Ratios In Distillation Single-End Control Structures

William L. Luyben*

Department of Chemical Engineering Lehigh University Bethlehem, Pennsylvania 18015, United States

ABSTRACT: Many distillation columns use single-end control structures in which one temperature (or composition) is controlled while the other control degree of freedom holds either the reflux ratio or the reflux-to-feed ratio constant. In most chemical processes, flow rates are determined from pressure drops over orifice plates. This means that the flow signal reflects the mass flow rate since density affects pressure drop. In computer simulations, flow rates can be studied in either molar or mass units. This paper considers the issue of using mass or molar flow ratios in single-end control structures. Results illustrate that using molar ratios can improve product quality in some systems. The practical question of how to estimate molar flow rates from plant measurements is addressed.

1. INTRODUCTION

The standard two-product distillation column has two control degrees of freedom when pressure, base level and reflux-drum level have been controlled. Therefore two other variables can be controlled. The theoretically ideal distillation control structure uses dual-composition control to minimize energy consumption for both throughput and feed composition disturbances. This structure is seldom used for several reasons.

1. Composition analyzers are expensive and require high maintenance.
2. They introduce significant deadtime in the loop, which degrades dynamic performance.
3. Interaction between the two loops can make tuning difficult.
4. Other more simple control structures can often provide better dynamic performance with only slightly higher energy consumption while holding product streams very close to their specifications.

Single-end control structures specify the two variables to be controlled in several different ways. The composition (temperature) profile must be maintained in the column, so one composition (temperature) must be selected. The choice of how to specify the other variable has been studied for as long as distillation columns have been operated (probably over a century). The standard approach is to find out if either a fixed reflux ratio structure or a fixed reflux-to-feed structure can provide effective control

From a steady-state performance standpoint, what is important is to maintain the compositions of the two products close to their specifications. Since both structures drive the process to a final steady state in which all flow rates have been ratioed up or down with throughput, we would expect that the column should reach steady-state conditions for feed *flow rate* disturbances that are essentially the same when using either structure. The compositions (temperatures) on all trays should be identical when comparing the two structures. This is not quite true because changes in vapor and liquid flow rates will change tray pressure drops, which affect temperatures (and in some cases stage efficiency).

However, the performances of the two structures are usually quite different when feed composition disturbances are considered. The composition profile must shift in order to maintain the compositions of the two end products. A widely used procedure for assessing this situation is called feed composition sensitivity analysis. A steady-state simulation is set up in which the desired compositions of the two products are maintained at their specified values while feed compositions of the light and heavy key components are changed. In Aspen Plus, two *Design spec/vary* functions are used. Then plots are made of the required changes in reflux ratio and in reflux-to-feed ratio. If either of these curves shows little change with feed composition, it may be possible to use single-end control with the appropriate ratio fixed.

Since most distillation analysis methods concentrate on molar flow rates and molar compositions, the ratios considered above are usually expressed as the ratio of molar flow rates. Of course, it does not matter in the case of reflux ratio (assuming a total condenser) since reflux and distillate have identical compositions. However, it does matter for the reflux-to-feed ratio. As the example presented in this paper illustrates, the use of molar ratios provides better performance (better product quality) in some systems.

However, there is a practical problem of how to measure the molar flow rate of feed. Most flow measurements are based on kinetic energy, so they can be used to get mass flow rates since density affects velocity. A later section considers this issue.

Another consideration in Aspen Dynamics simulations is the restriction that reflux flow rate must be specified in mass flow rate units. This makes it easy to set up a reflux-to-feed ratio in mass units. It is slightly more difficult to use molar ratios. These alternative structures are illustrated later in this paper.

Received: June 11, 2013
Revised: October 4, 2013
Accepted: October 15, 2013
Published: October 15, 2013

ACS Publications © 2013 American Chemical Society

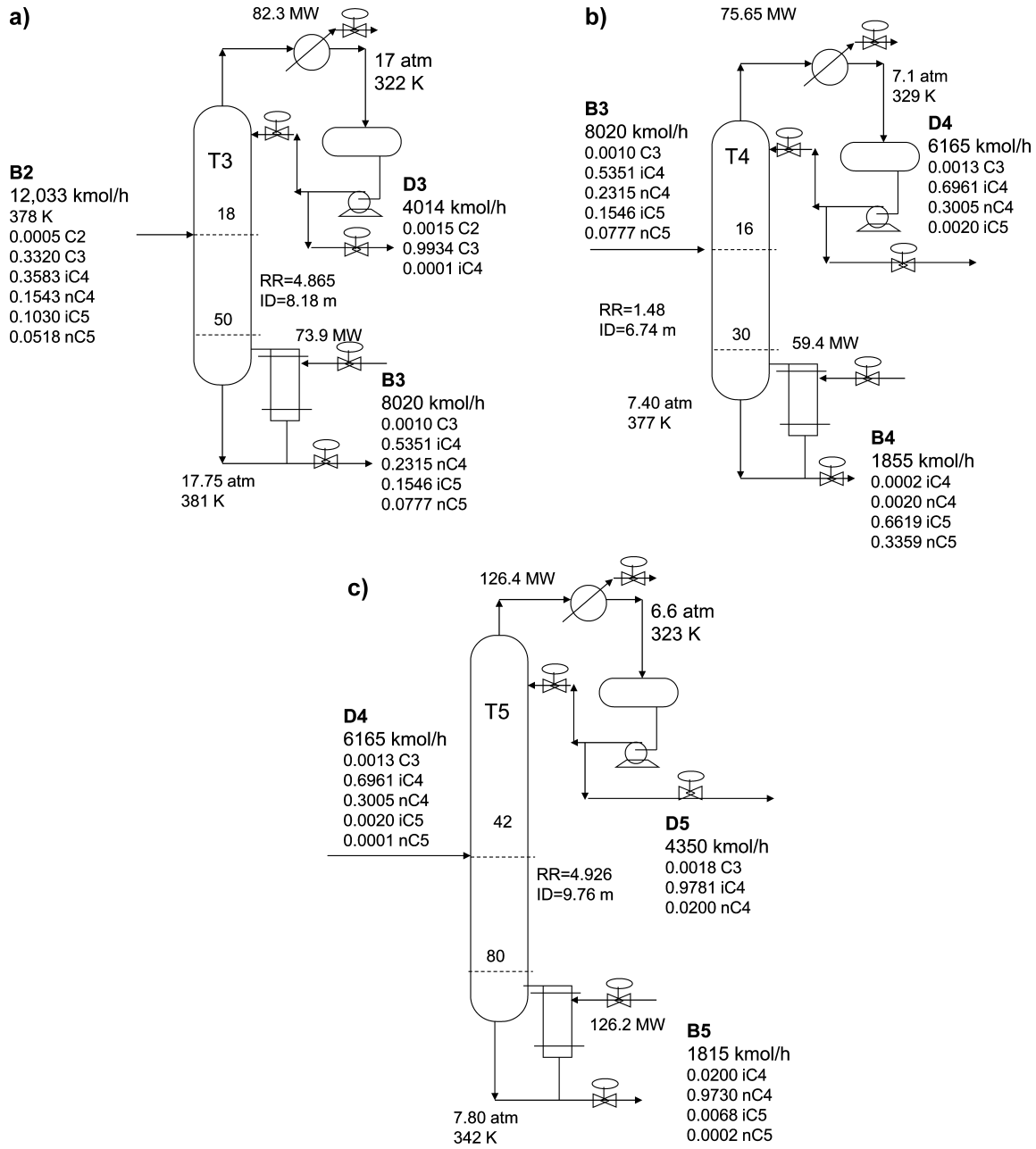

Figure 1. (a) Depropanizer T3, (b) debutanizer T4. (c), deisobutanizer T5.

2. PROCESS STUDIED

The numerical example used in this paper considers the three distillation columns at the end of an enhanced oil recovery (EOR) lightends process and is based on the information provided by Tavan and Hosseini.[1] The large amount of carbon dioxide in the natural gas from the well dictates the use of an extractive distillation system to separate the ethane from the carbon dioxide because of an azeotrope. The control of the high-pressure cryogenic two-column extractive process has been considered in a recent paper.[2] The bottoms from the ethane recovery column is called natural gas liquid (NGL) and is fed to three distillation columns operating in series. The feed is a mixture of propane (C3), isobutane (iC4), n-butane (nC4), isopentane (iC5), and n-pentane (nC5). See Figure 1a. Aspen simulations are used in this study with Peng−Robinson physical properties.

2.1. Depropanizer (T3). The column operates at 17 atm so that a reflux-drum temperature of 322 K is achieved, which permits the use of cooling water in the condenser. The C3/C4 separation is somewhat difficult, so a column with 51 stages is used. The feed tray location that minimizes reboiler duty is Stage 18.

The design specifications are 0.01 mol % iC4 in the distillate and 0.1 mol % C3 in the bottoms. Notice that all the C2 in the feed leaves in the distillate (0.15 mol % C2), which depends on the operation of the upstream C2 recovery column. The required reflux ratio is 4.86 and the reboiler duty is 73.9 MW of low-pressure steam. Column diameter is 8.18 m for the very large feed flow rate.

2.2. Debutanizer (T4). Figure 1b gives the flowsheet for the debutanizer column whose function is to take the iC4 and nC4 components overhead for subsequent separation in the downstream column. Because the iC4/nC4 separation is quite

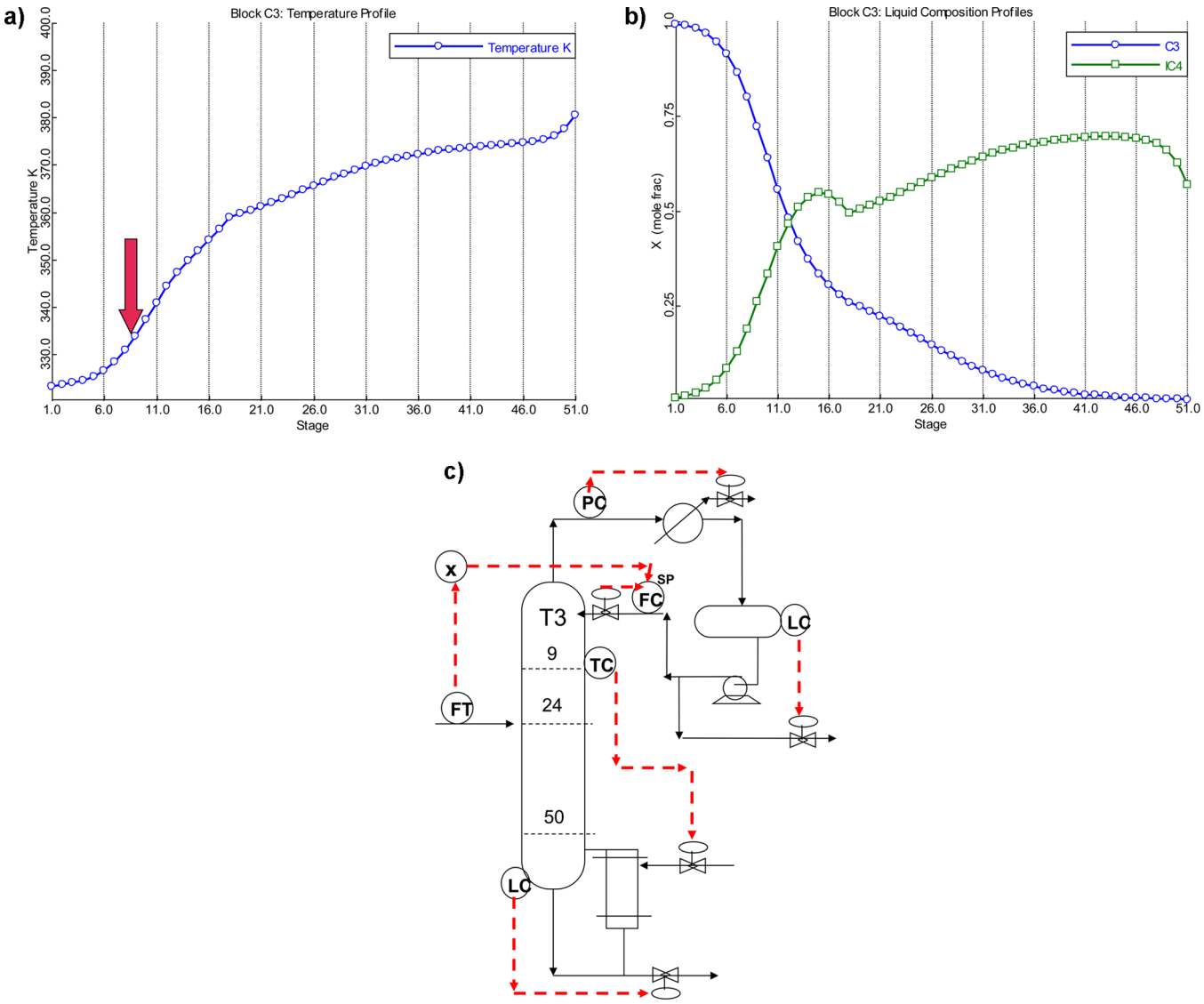

Figure 2. (a) Depropanizer temperature profile, (b) depropanizer composition profiles, (c) depropanizer control structure.

difficult (1.3 relative volatility at 322 K), conventional distillation wisdom recommends that this separation be performed when the mixture is essentially binary so as to minimize energy requirements.

The separation in the debutanizer is between the nC4 and the iC5, which is fairly easy with a relative volatility of 2.2 at 322 K. A column with 31 stages is used, operating at 7.1 atm to give a reflux-drum temperature of 329 K. The feed tray location that minimizes reboiler duty is Stage 16.

The design specifications are 0.2 mol % iC5 in the distillate and 0.2 mol % nC4 in the bottoms. The required reflux ratio is 1.48 and the reboiler duty is 59.4 MW of low-pressure steam. Column diameter is 6.74 m.

2.3. De-Isobutanizer (T5). Figure 1c gives the flowsheet for the deisobutanizer column whose function is to make the difficult separation between iC4 and nC4. A column with 81 stages is used, operating at 6.6 atm to give a reflux-drum temperature of 323 K. The feed tray location that minimizes reboiler duty is Stage 42.

The design specifications are 2 mol % nC4 in the distillate and 2 mol % iC4 in the bottoms. A high reflux ratio of 4.926 is required. Reboiler duty is 126 MW of low-pressure steam. Column diameter is 9.76 m.

3. CONTROL STRUCTURE DEVELOPMENT

The development of control structures for each of the three distillation columns is discussed in the following sections. All liquid holdups are sized to provide 5 min of holdup when half full. All base and reflux-drum level controllers are proportional with $K_C = 2$.

3.1. Depropanizer Control Structure. The key components in this column are C3 and iC4. The possibility of using a simple single-end tray-temperature control structure is explored by first looking at the temperature and composition profiles shown in Figure 2a and b. The C3 and iC4 compositions are changing fairly rapidly around Stage 9, where the temperature profile is also changing. So Stage 9 is selected to test.

Feed composition sensitivity analysis is used to see if a single-end control structure could be effective. Using steady-state Aspen Plus simulation, the C3 and iC4 compositions of the feed to the column are changed from their design values while maintaining the specified key-component impurity levels in the distillate and bottoms by using two Aspen *Design spec/vary*

functions. Table 1 gives the results of these calculations for the depropanizer column. Note that both the molar and mass flow rates of reflux and feed are given. For these calculations, the molar feed flow rate is held constant at 12,033 kmol/h. Then the mole fraction of C3 in the feed is changed over a range around its design value of 33.20 mol % C3. The iC4 composition of the feed is changed in the opposite direction from its design value of 35.83 mol % iC4. Note that mass flow rate of the feed changes as feed composition changes because the feed molar flow rate is held constant.

Table 1. Depropanizer Feed Composition Sensitivity Analysis

Feed Propane Composition (mole fraction)		0.2820	0.3320 design	0.3820
feed	Mmol/h	12.03	12.03	12.03
	Mg/h	677.8	669.4	660.9
reflux	Mmol/h	20.46	19.53	20.30
	Mg/h	903.0	864.1	896.4
R/F molar		1.701	1.623	1.687
% change from design		+4.81	0	+3.94
R/F mass		1.332	1.291	1.357
% change from design		+3.18	0	+5.11
reflux ratio		5.983	4.865	4.387
% change from design		+23.0	0	−9.82

These results indicate that a reflux-to-feed ratio structure should be better than a reflux ratio structure since the percent changes in R/F are smaller than those in RR. We will return to the important question of whether the ratio should be molar or mass later in the paper.

The control structure for the Depropanizer is shown in Figure 2c and has the following loops:

1. Feed comes in on level control from the upstream ethane recovery column. In the simulations, a flow controller is used on this stream to impose flow rate disturbances.
2. Pressure is controlled by manipulating condenser duty. This is shown as manipulating cooling water but other alternative setups are widely used such as flooded condensers, hot-vapor bypass and vent-bleed systems.
3. Reflux is ratioed to feed. Both molar and mass flow ratios will be tested.
4. Reflux-drum level is controlled by manipulating the flow rate of the distillate product.
5. Base level is controlled by manipulating the flow rate of the bottoms.
6. Stage 9 temperature is controlled by reboiler duty. The controller has a 1 min deadtime and is tuned by running a relay-feedback test and using Tyreus-Luyben settings. Tuning constants are K_C = 2.14 and τ_I = 17 min with a 100 K temperature transmitter span and a maximum heat duty of 35.3 × 10^6 cal/s.

Evaluation of the effectiveness of this single-end tray-temperature control structure in terms of both its individual performance and its effect on the downstream columns is presented in a later section of this paper.

3.2. Debutanizer Control Structure. The key components in this column are nC4 and iC5. The possibility of using a simple single-end tray-temperature control structure is explored by first looking at the temperature and composition profiles shown in Figure 3a and b. The nC4 and iC5 compositions are changing fairly rapidly around Stage 21, where the temperature profile is also changing. So Stage 21 is selected to test.

Feed composition sensitivity analysis is used to see if a single-end control structure could be effective. Results indicate that a single-end control structure with a fixed reflux-to-feed ratio should be better at handling feed composition changes than a fixed reflux ratio structure.

The control structure for the debutanizer is shown in Figure 3c and has the following loops:

1. Feed comes in on level control from the upstream column.
2. Pressure is controlled by manipulating condenser duty.
3. Reflux is ratioed to feed.
4. Reflux-drum level is controlled by manipulating the flow rate of the distillate product.
5. Base level is controlled by manipulating the flow rate of the bottoms.
6. Stage 21 temperature is controlled by reboiler duty. The controller has a 1 min deadtime and is tuned by running a relay-feedback test and using Tyreus-Luyben settings. Tuning constants are K_C = 1.81 and τ_I = 12 min with a 100 K temperature transmitter span and a maximum duty of 28.4 × 10^6 cal/s.

Evaluation of the effectiveness of this single-end tray-temperature control structure is presented in a later section of this paper.

3.3. De-Isobutanizer Control Structure. This column represents the most difficult separation and the most challenging control problem. The reflux ratio in this super-fractionator is large, so conventional distillation control wisdom recommends controlling reflux-drum level using reflux. The temperature profile is flat because the changes in compositions from tray to tray are very small. So the use of temperatures to infer compositions is not effective. The temperature difference between the top and the bottom of the column is 20 K, which may seem to be sufficient to permit the use of temperature control. However, the effect of tray pressure drop on the temperature profile in this 81-stage column is quite large. The assumed pressure drop is 0.015 atm per tray, giving a base pressure of 7.8 atm and a base temperature of 342 K (see Figure 1c). If there were no tray pressure drop, the base pressure would be 6.6 atm and the base temperature would be 335 K, giving a column temperature change of only 12 K, which is due to composition change.

The key components in this column are iC4 and nC4. Temperature and composition profiles are shown in Figure 4a and b. Feed composition sensitivity analysis is used to see if a single-end composition control structure could be effective or if a dual-composition control scheme is required. Results indicate that a single-end composition control structure with a fixed reflux-to-feed ratio should be significantly better at handling feed composition changes than a fixed reflux ratio structure.

It is important to note that there are two competing rules from distillation control wisdom. The first suggests that the reflux-drum level should be controlled by reflux because of the very high reflux ratio. The second suggests that the reflux should be ratioed to the feed. It appears that we cannot follow both of these rules. However, there is a control structure that permits both.

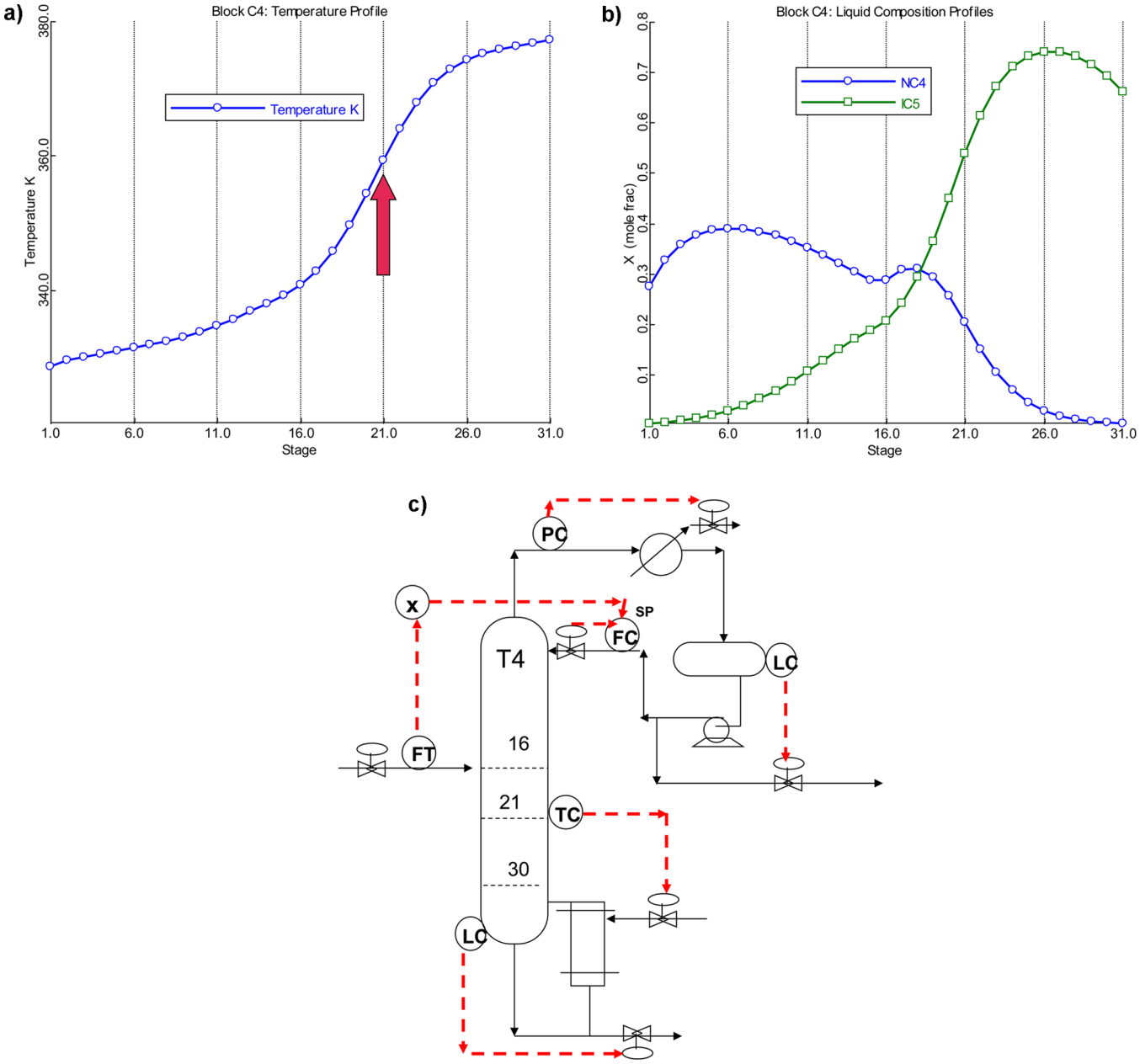

Figure 3. (a) Debutanizer temperature profile, (b) debutanizer composition profiles, (c) debutanizer control structure.

The control structure for the debutanizer is shown in Figure 4c and has the following loops:

1. Feed comes in on level control from the reflux drum of the upstream column.
2. Pressure is controlled by manipulating condenser duty.
3. Reflux is ratioed to feed.
4. Reflux-drum level is controlled by manipulating reboiler duty.
5. Base level is controlled by manipulating the flow rate of the bottoms.
6. Distillate nC4 impurity is controlled by manipulating the control valve in the distillate line. The controller has a 3-min deadtime and is tuned by running a relay-feedback test and using Tyreus-Luyben settings. Tuning constants are $K_C = 3.6$ and $\tau_I = 95$ min with a 5 mol % composition transmitter span.

This control structure is unusual because of the use of reboiler heat input to control reflux-drum level. Since the reflux ratio is large, the reflux-drum level would normally be controlled by manipulating the reflux flow rate. However, the reflux-to-feed control structure is indicated by the feed composition sensitivity analysis to require very small changes in this ratio, so it is logical to fix this ratio. However, some other effective variable must be selected to control the liquid level in the reflux drum. Using distillate would be ineffective because its flow rate is much smaller than the reflux. Using reboiler duty works well for this job because the changes in vapor flow rates in the column are quite rapid.

Evaluation of the effectiveness of this single-end composition control structure is presented later in this paper.

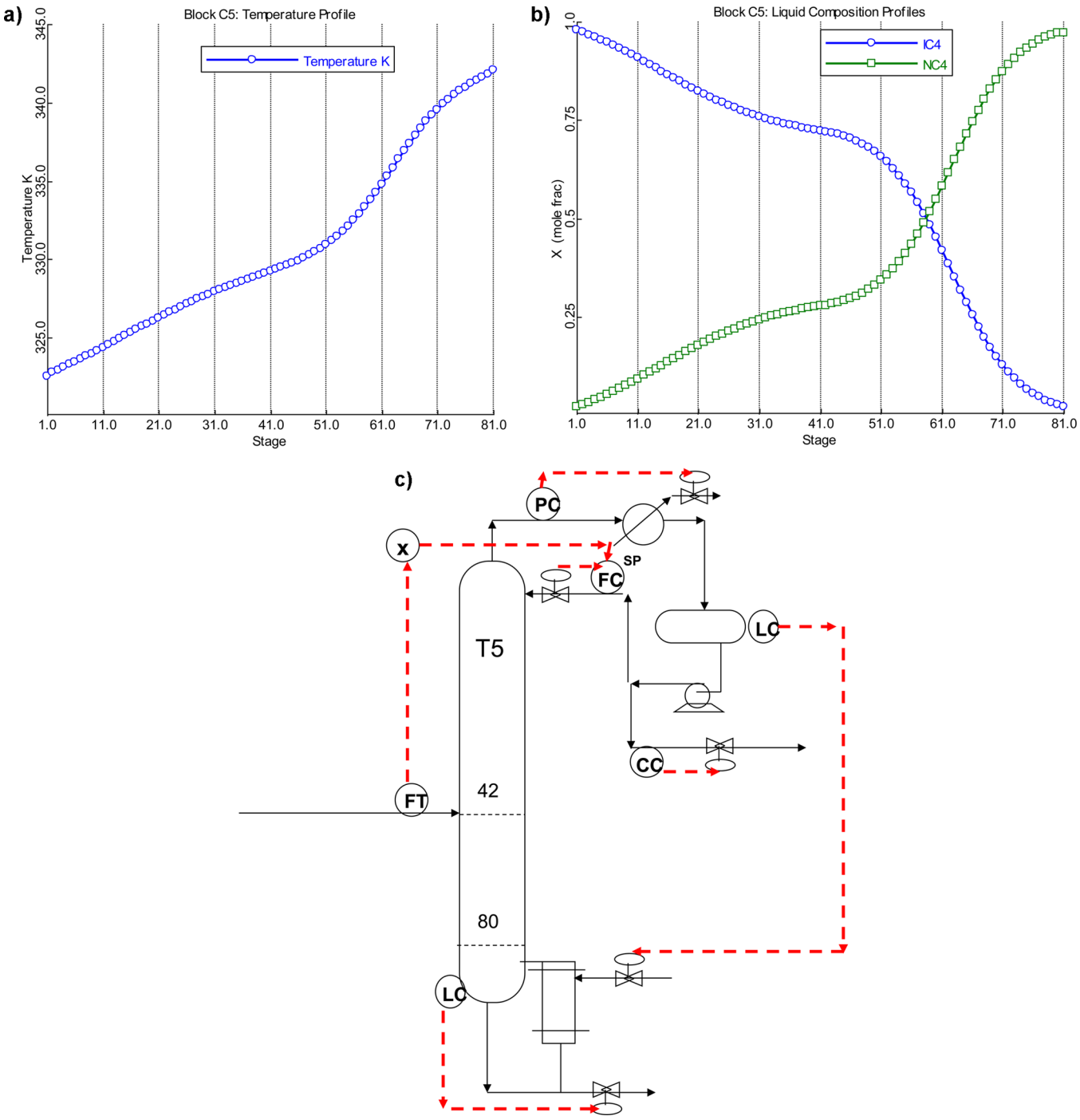

Figure 4. (a) Deisobutanizer temperature profile, (b) deisobutanizer composition profiles, (c) deisobutanizer control structure.

4. IMPLEMENTING MASS AND MOLAR RATIOS

Aspen Dynamics has a restriction in its *Radfrac* distillation model that only the **mass** flow rate of reflux can be selected as an input to the column. The standard model simplifies the real physical equipment, which consists of a pump and a control valve on the reflux line, and assumes the mass flow rate of reflux can be directly set.

Therefore it is easy to set up a reflux-to-feed ratio in mass units. The *mass* flow rate of feed is fed to a multiplier block whose other input is the specified mass R^m/F^m ratio. To be consistent with Aspen notation, in this paper mass flow rate are denoted by a "m" superscript. The absence of a superscript indicates molar units. The output of the multiplier is the mass flow rate of reflux. Figure 5a shows the Aspen Dynamics implementation of the mass ratio structure.

If we want to use a *molar* ratio, an alternative setup is required as shown in Figure 5b. A flow controller on the reflux is installed whose controlled process variable (PV) is the reflux *molar* flow rate, which can be accessed from the block. The output variable from the flow controller (OP) is selected to be the reflux *mass* flow rate. The normal flow controller setting are used (K_C = 0.5 and τ_I = 0.3 min). The reflux flow controller is put on "cascade" with its set point coming from a multiplier. This multiplier has one input that is the *molar* flow rate of the

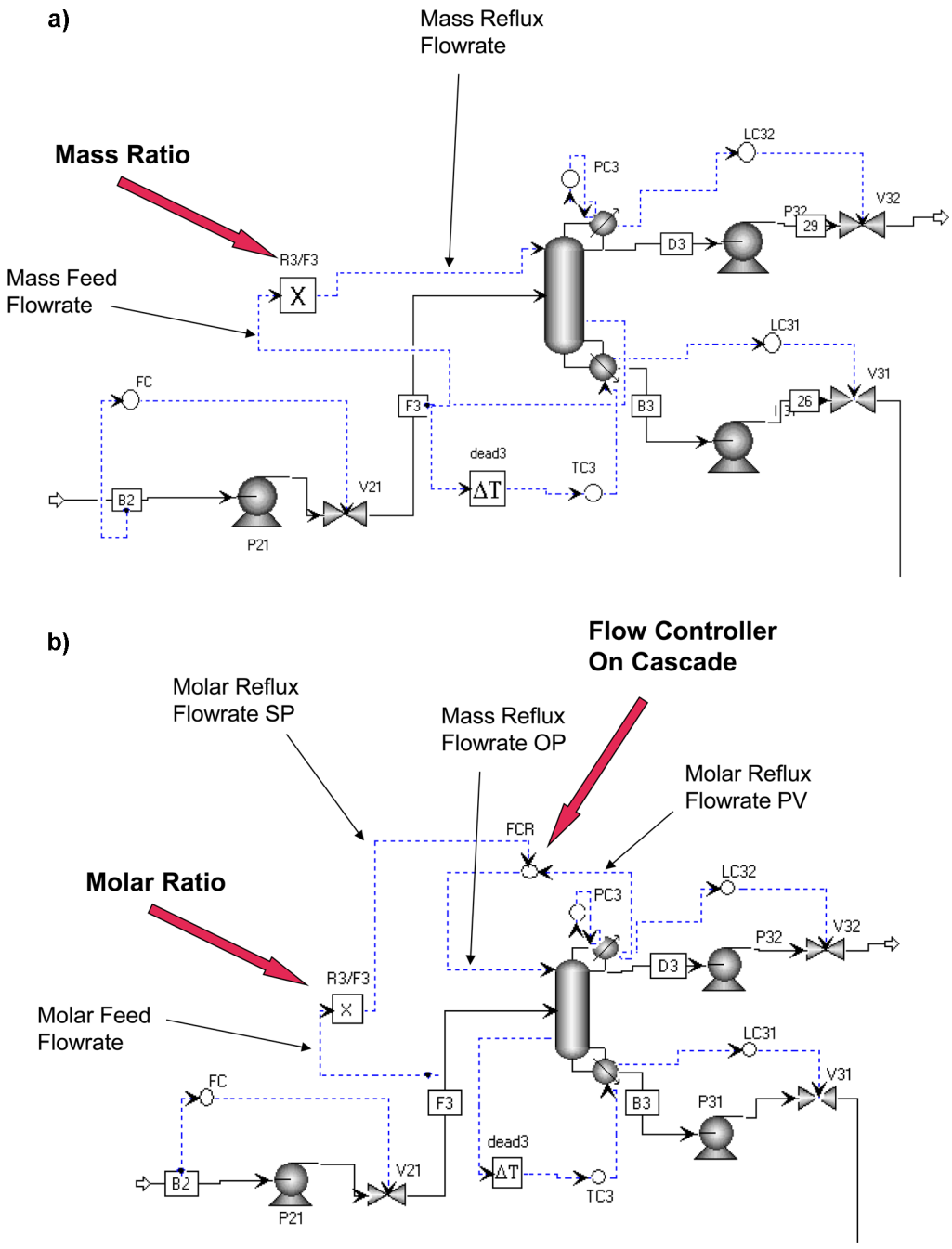

Figure 5. (a) Conventional mass reflux-to-feed ratio; Aspen Dynamics implementation. (b) Molar reflux-to-feed ratio; Aspen Dynamics implementation.

feed, and a second input that is the desired molar R/F ratio. These alternative structures are used in the next section.

5. DYNAMIC PERFORMANCE

A direct comparison of mass and molar reflux-to-feed ratios is shown in Figure 6. The disturbance is a step change in feed composition to the depropanizer (T3) at time equal 0.5 h. The C3 is increased from 33.20 mol % to 38.20 mol % C3. The iC4 is decreased from 35.85 mol % to 30.85 mol % iC4. The solid lines are when a molar R/F ratio is used (1.648 at design conditions). The dashed lines are when a mass R^m/F^m ratio is used (1.291 at design conditions).

Figure 6a shows how variables in the depropanizer change. The purity of the distillate $x_{D3(C3)}$ is held close to its desired value with slightly more iC4 impurity $x_{D3(iC4)}$. Stage 9 temperature is well controlled by manipulation of reboiler duty Q_{R3}. More propane entering the column produces more distillate D3.

The major difference between the mass and molar reflux-to-feed ratios is the impurity of C3 in the bottoms $x_{B3(C3)}$ as shown in the bottom left graph in Figure 6a. The mass ratio produces a very large increase in the C3 that drops out the bottom of the column. This will adversely affect the purity of the iC4 product produced in the downstream deisobutanizer, as discussed below. The molar ratio produces a much smaller increase in C3 in the bottoms.

The reason for this difference can be easily explained. The flow controller on the feed is holding the total molar flow rate

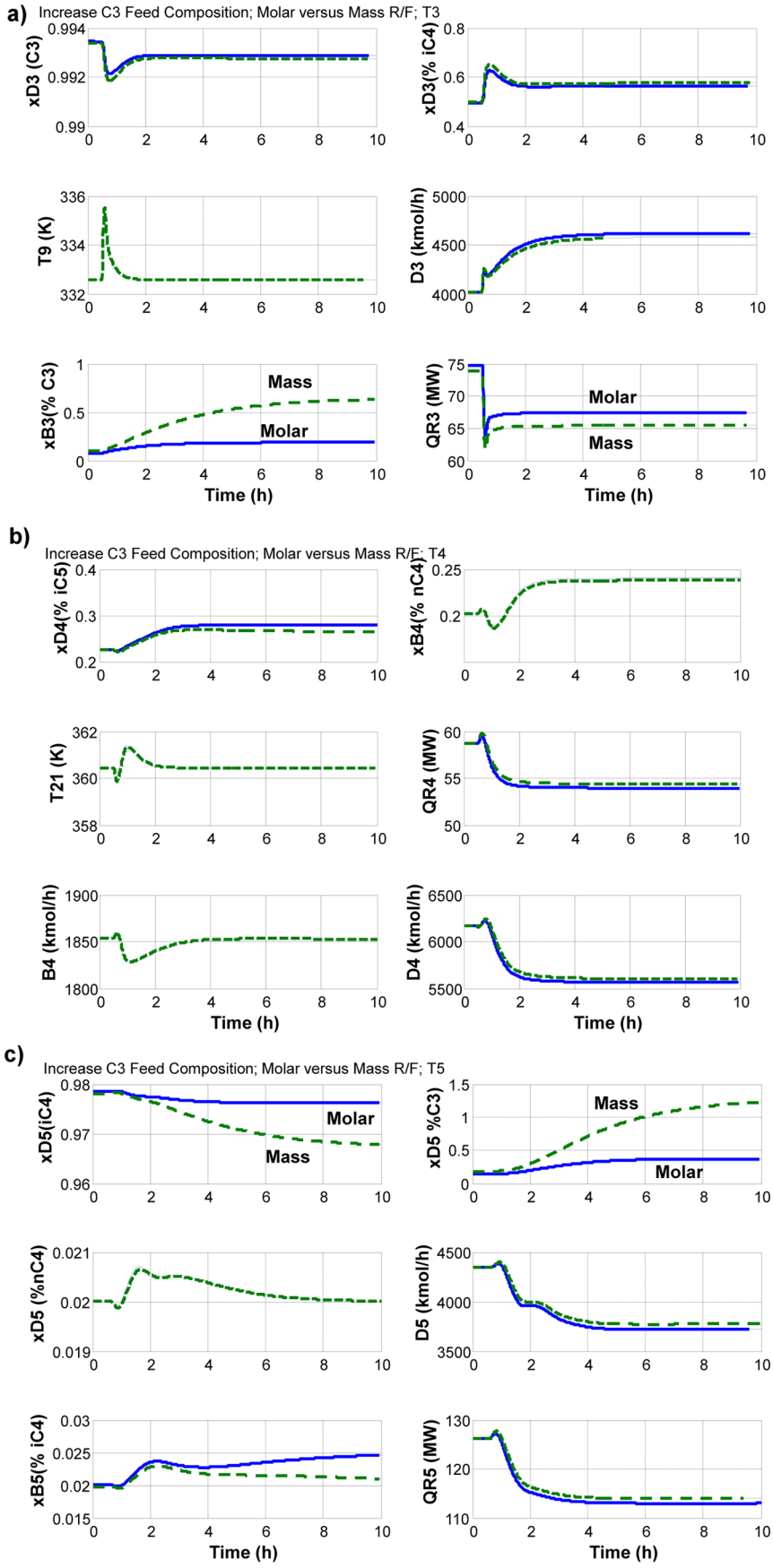

Figure 6. (a) Comparison of mass and molar ratio; T3. (b) Comparison of mass and molar ratio; T4. (c) Comparison of mass and molar ratio; T5.

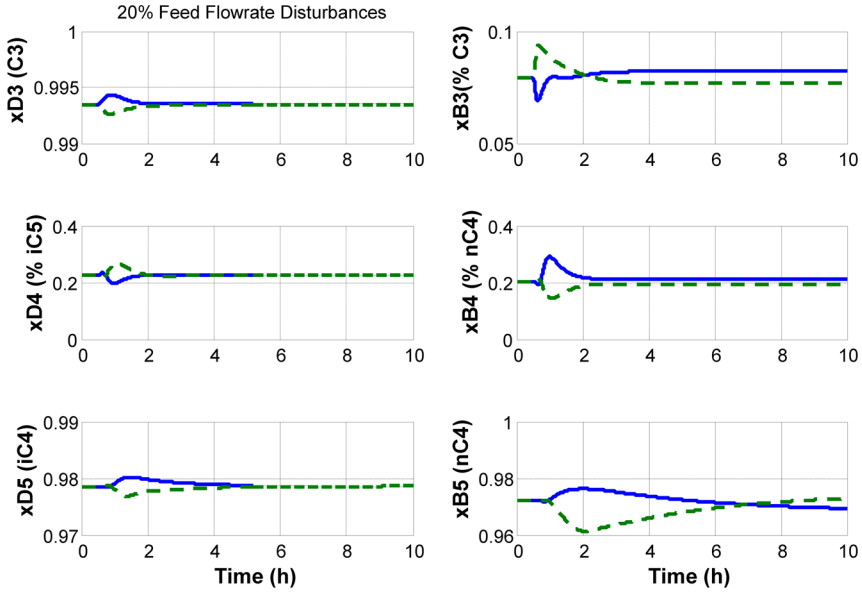

Figure 7. Feed flow rate disturbances.

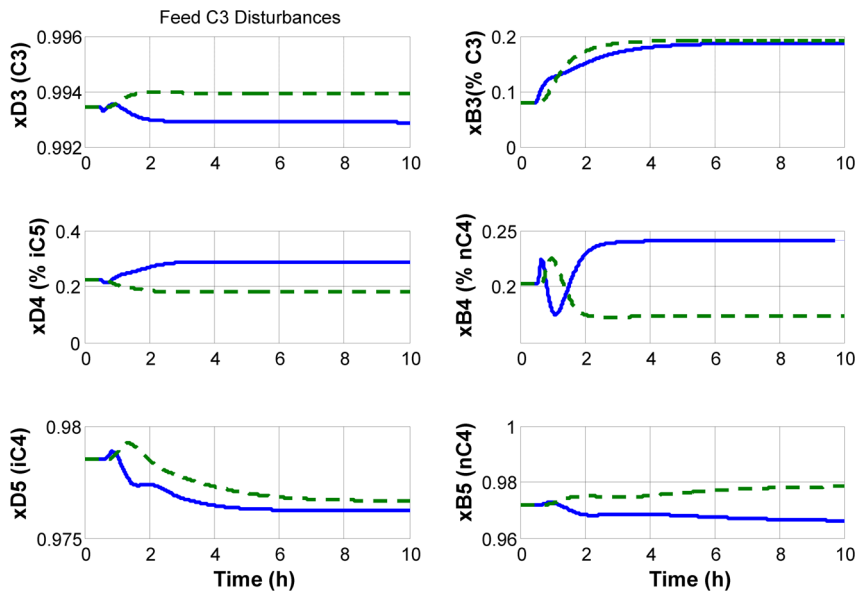

Figure 8. Feed C3 feed composition disturbances.

constant. When the composition is changed, the mass flow rate changes. Higher C3 compositions give a smaller molecular weight of the feed, which means a smaller mass flow rate. Thus the mass ratio structure will reduce the mass flow rate of reflux. This produces lower fractionation and higher C3 impurity in the bottoms. On the other hand, the molar ratio structure will keep the molar flow rate of the reflux constant since the feed total molar flow rate is constant. This results in only a small reduction in fractionation.

The obvious question at this point is what happens if we set up the feed flow controller to control the total *mass* flow rate instead of the total molar flow rate, which would be the situation in reality. Simulations show that the results are essentially the same: the molar ratio works better than the mass ratio. The increase in C3 feed composition decreases the molecular weight of the feed. With a fixed mass flow rate, the molar flow rate of the feed increases, which increases the load on the column.

Figure 6b shows that there is little impact of the alternative ratio structures on the debutanizer (T4). However, Figure 6c shows that the deisobutanizer (T5) is grossly affected. All the propane that drops out the bottom of the depropanizer ends up in the overhead of the deisobutanizer. The C3 impurity in the distillate increases drastically when the mass ratio structure is used, which drops iC4 purity significantly.

Thus in this system, the molar ratio structure is much better than the mass ratio structure.

Other disturbances are imposed on the process to see how well both increases and decreases in throughput and feed composition are handled by the molar ratio structure. Figure 7 gives overall results for 20% disturbances in feed flow rate (solid lines are increases, dashed lines are decreases). Figure 8 gives results for disturbances in C3 feed composition (solid lines are increases to 38.30 mol % C3, dashed lines are decreases to 28.30 mol % C3 with opposite changes in iC4). Figure 9 give results for disturbances in C4 feed composition

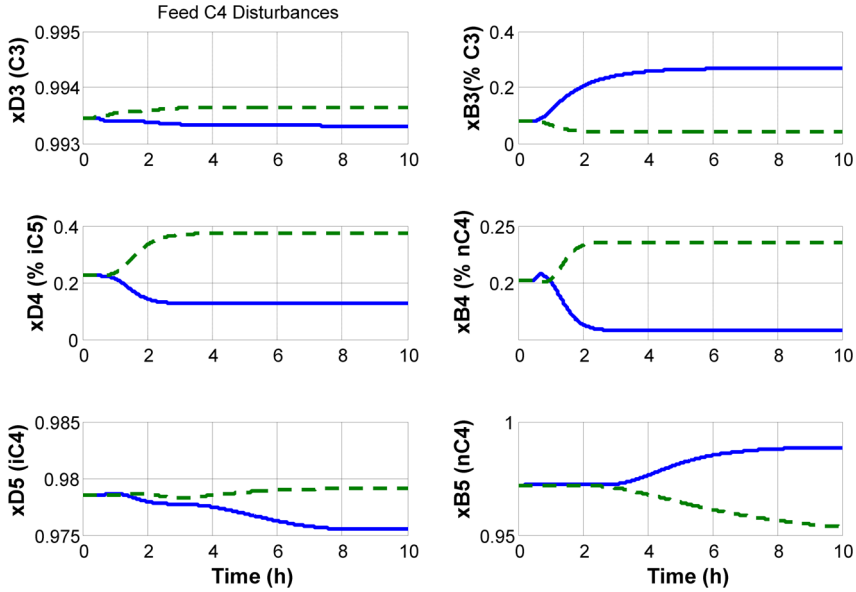

Figure 9. Feed C4 feed composition disturbances.

(solid lines are increases to 40.83 mol % iC4, dashed lines are decreases to 30.83 mol % iC4 with opposite changes in nC4). All of these large disturbances are well handled using the molar reflux-to-feed ratios on all three columns.

6. OTHER SYSTEMS

The numerical example presented in this paper of the depropanizer (propane-isobutane separation) has the feature that a single-end control structure with a fixed reflux-to-feed ratio handles feed composition disturbances better than a single-end control structure with fixed reflux ratio. This is certainly *not* true for all separations. Distillation columns making separations between other components or with other feed compositions can have completely different properties as pointed out almost four decades ago.[3]

In some systems, neither *RR* nor *R*/*F* structure is effective because of large changes in both parameters as feed composition changes. Table 2 illustrates such a case. The important methanol/water separation is considered in a 31-stage column operating at 1 atm. Designs with two different binary feed compositions (z = 0.7 and z = 0.2) are considered with high product purities (99.9 mol %). Feed in introduced on the stage that minimizes reboiler duty. Aspen NRTL physical properties are used. With a 70 mol % methanol feed, the feed composition sensitivity results show fairly large changes (8%) in both ratios (molar ratios are shown). With a 20% methanol feed, the changes are very large (20%). So a single-end structure will not be effective and any consideration of mass versus molar ratios is moot.

Table 2. Methanol−Water Feed Composition Sensitivity Analysis (molar flow ratios)

feed composition (mol % MeOH)	*RR*	*R*/*F*
65	0.9536	0.6203
70 design 1	0.9367	0.6561
75	0.9185	0.6794
change over range	8.2%	10.5%
15	1.454	0.2171
20 Design 2	1.256	0.2505
25	1.171	0.2921
Change over range	22%	30%

Table 3 gives results for another important separation. A ternary benzene−toluene−xylene mixture is fed to a 31-stage column operating at 1 atm. The optimum feed stage is Stage 16. Aspen Chao-Seader physical properties are used. Design specifications are 0.5 mol % toluene in the distillate and 0.5 mol % benzene in the bottoms. Feed composition sensitivity results show a distinct preference for the reflux-to-feed structure (3% changes) compared to the reflux-ratio structure (30% changes).

Table 3. BTX Feed Composition Sensitivity Analysis (molar flow ratios)

feed composition (mol % B)	feed composition (mol % T)	RR	R/F
25	35	1.903	0.4710
30 design	30	1.614	0.4808
35	25	1.398	0.4885
change over range		31%	3.6%

So the important message is that each specific system needs to be examined. No general conclusions can be drawn about which systems can use single-end control, in which systems *R*/*F* is better than *RR* or in which systems molar R/F is better than mass R^m/F^m. We would intuitively think that the difference between the molar and mass ratios should be more significant the larger the molecular weight difference between the key components. But other factors such as relative volatilities and product purities also affect results.

7. STEADY-STATE METHOD FOR COMPARING *R*/*F* RATIOS

In the numerical depropanizer example, comparisons between molar and mass reflux-to-feed ratios were made using dynamic simulations. However, dynamic simulations are **not** required to make this assessment. Steady-state analysis can be more easily employed.

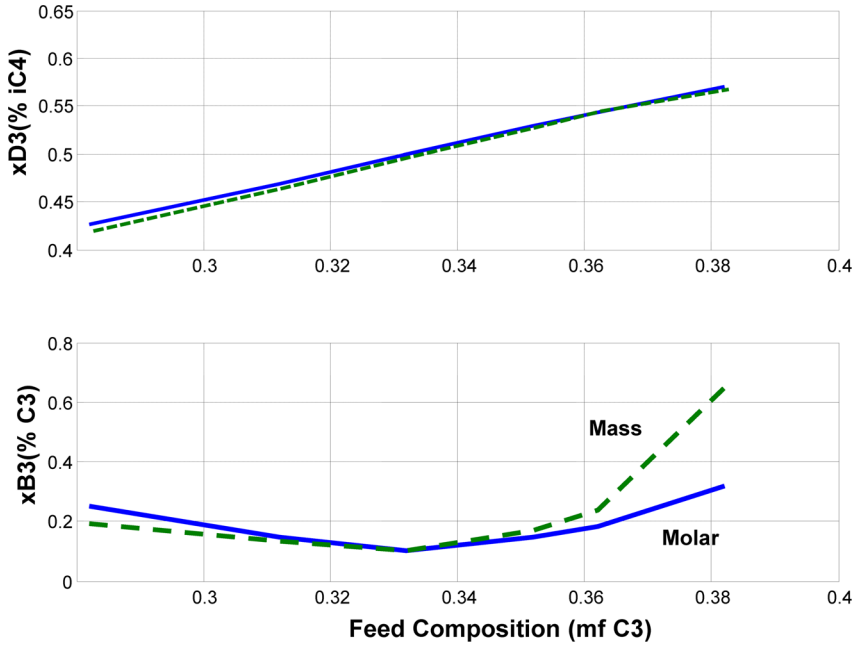

Figure 10. Steady-state comparison of mass and molar R/F; T3.

The method consists of the following steps:

1. Set up the steady-state design that achieves the desired product specifications with the design feed composition. In Aspen Plus simulation, this involves two *Design spec/vary* functions.
2. Record the molar and mass flow rates of feed and reflux.
3. Select the appropriate tray for temperature control.
4. Set up a new steady-state program with the *mass* flow rates of feed and reflux fixed.
5. Use a *Design spec/vary* function that manipulates distillate flow rate to hold the temperature of the control tray constant as feed composition is varied over an appropriate range.
6. Record the changes in the product compositions using this single-end control structure with a fixed *mass* reflux-to-feed ratio.
7. Go back to Step 4 but specify now that the *molar* flow rates of feed and reflux are fixed.
8. Repeat Steps 5 and 6 and compare results between mass and molar ratios.

Results of these steady-state calculations for the depropanizer are shown in Figure 10. There is little difference between the two structures in terms of the iC4 impurity in the distillate $x_{D3(iC4)}$. There is a significant difference in terms of the C3 impurity in the bottoms $x_{B3(C3)}$, which is the same result found in the dynamic simulations.

8. ESTIMATION OF MOLAR FEED FLOW RATES

One important final issue to be considered in this paper is how to estimate molar flow rates from measured plant flow rates. In simulations, both molar and mass flow rates are available. But most commonly used flow measurement devices are based on density, so they give mass flow rates. To use a molar feed-to-reflux control structure, a method for estimating the molar flow rate of the feed is required.

The composition of the reflux normally will not change significantly, so the molar flow rate can be related to the measure mass flow rate using design conditions (molecular weight). However, this is not true for the feed whose molecular weight can vary significantly with feed composition.

If a feed composition analyzer were available, this conversion could be made. Feed analyzers are very rarely available, so some method for estimating the molar flow rate is required to implement the molar ratio structure in a real operating distillation column.

In this section we discuss a method for estimating the *molar* flow rate of the feed from real-time *mass* flow rate data and design information. The basic idea is to use the measured distillate-to-feed ratio as an indication of the amount of light-key component in the feed.

The measured plant data, the known design information and the specified information are:

1. Mass flow rates of feed (F^{m}), distillate (D^{m}), and reflux (R^{m}).
2. Desired molar ratio of reflux-to-feed $(R/F)_{desired}$.
3. Feed composition at design (mole fraction light-key component z_{design}). This composition z is unknown during operation.
4. Feed molecular weight at design ($M_{F,design}$). This molecular weight is unknown during operation.
5. Distillate composition and molecular weight at design (M_D). These are assumed to change very little during operation.

The mole fraction of the light-key component under conditions away from those at design can be estimated by taking the ratio of moles of distillate divided by moles of feed.

$$z = \frac{D^{m}/M_{D}}{F^{m}/M_{F}} \tag{1}$$

The unknowns are z and M_F (the molecular weight of the feed). It can be estimate from the light-key component composition z in the feed, if it were known.

$$M_{F} = M_{LK}z + (1 - z)M_{average} \tag{2}$$

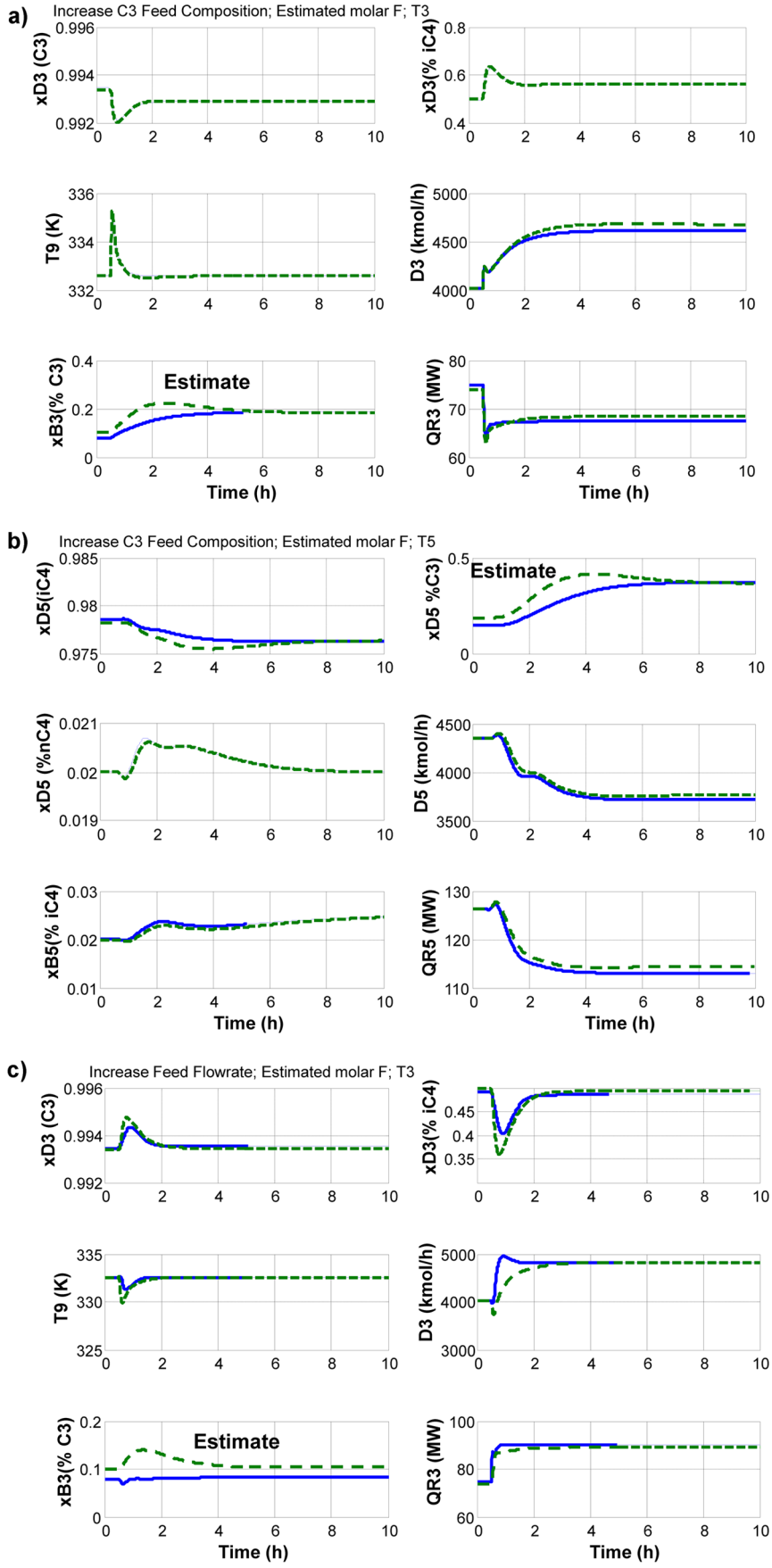

Figure 11. (a) Comparison of estimated and actual molar flows; T3; feed C3 composition disturbance. (b) Comparison of estimated and actual molar flows; T5; feed C3 composition disturbance. (c) Comparison of estimated and actual molar flows; T3; feed flow rate disturbance.

The molecular weight of the light-key component M_{LK} is constant and is essentially equal to the molecular weight of the distillate, which is known at design conditions. The average molecular weight of all *other* components in the feed is $M_{average}$. The molecular weight of the feed can be calculated at design conditions $M_{F,design}$ using eq 2 since z is known at design. We assume that this average molecular weight for the other components should be fairly constant in most situations as the light-key composition varies.

Now the feed composition can be estimate from the online data using the following steady-state light-key component balance equation.

$$z = \frac{D^m/M_{LK}}{F^m/[zM_{LK} + (1-z)M_{average}]} \tag{3}$$

This equation has one unknown z. It can be rearranged to solve explicitly for z.

$$z = \frac{1}{\left(\frac{M_{LK}}{M_{average}}\right)\left(\frac{F^m}{D^m} - 1\right) + 1} \tag{4}$$

Equation 4 can be used to estimate the feed composition from the measured mass flow rates of feed and distillate. It is, of course, a steady-state relationship and does not apply at each point in time. Our purpose here is to simply trim up the molar reflux-to-feed ratio to achieve better steady-state product quality. So the feedback of distillate and feed flow rate information should be sent through dynamic lags to prevent rapid swings in the calculated molar feed flow rate.

The steps in the online procedure are given below with the parameters M_{averag} and M_{LK} known from calculations at design conditions:

1. Measure the mass flow rate of feed F^m and the mass flow rate of distillate D^m and send these signals through first-order lags.
2. Calculate feed composition z using eq 4.
3. Calculate feed molecular weight M_F using eq 2.
4. Calculate molar feed flow rate $F = F^m/M_F$.
5. Calculate desired molar reflux flow rate $R = F(R/F)_{desired}$.
6. Calculate mass reflux flow rate $R^m = R \cdot M_{LK}$.
7. Send this signal as a set point to a mass flow controller for reflux.

Figure 11 demonstrates the application of this estimation method on the depropanizer system. The estimation equations are implemented in Aspen Dynamics using *Flowsheet Equations* to convert the mass flow rates of feed and distillate into an estimated feed molar flow rate. Solid lines assume molar flow rates can be measured. Dashed lines use an estimated feed molar flow rate. The feed and distillate mass flow rates are each sent to first-order lags of 15 min so that the estimates are slowly updated. Control performance with estimation is quite similar to that attained when molar flow rates are measured.

9. CONCLUSION

Single-end control structures are widely used in industry with one control degree of freedom used to control a temperature or a composition. Setting the other control degree of freedom requires selecting between a reflux ratio structure and a reflux-to-feed structure. In addition, the issue of whether to use molar ratios or mass reflux-to-feed ratios should be considered. These choices can produce significantly different results in some distillation systems.

AUTHOR INFORMATION

Corresponding Author

*Phone: 610-758-4256. Fax: 610-758-5057. E-mail: WLL0@Lehigh.edu.

Notes

The authors declare no competing financial interest.

REFERENCES

(1) Tavan, Y.; Hosseini, S. H. Enhanced ethane recovery process in an extractive dividing wall column. *Chem. Eng. Science* **2013**, submitted.

(2) Luyben, W. L. Control of an extractive distillation system for the separation of CO_2 and ethane in enhanced oil recovery processes. *Ind. Eng. Chem. Res.* **2013**, *52*, 10780−10787.

(3) Luyben, W. L. Steady-state energy conservation aspects of distillation column control system design. *Ind. Eng. Chem. Res. Fund.* **1975**, *14*, 321−325.