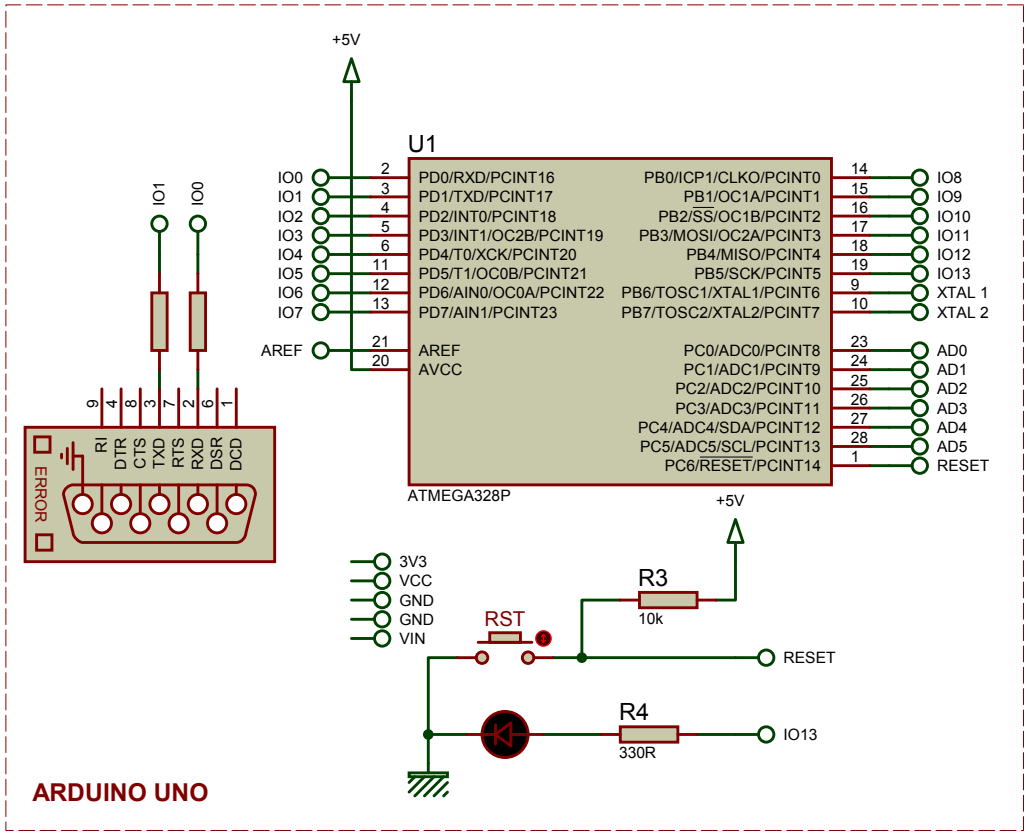
+5V
U1
IO0
IO1
IO2
IO3
IO4
IO5
IO6
IO7
AREF
PD0/RXD/PCINT16
PD1/TXD/PCINT17
PD2/INT0/PCINT18
PD3/INT1/OC2B/PCINT19
PD4/T0/XCK/PCINT20
PD5/T1/OC0B/PCINT21
PD6/AIN0/OC0A/PCINT22
PD7/AIN1/PCINT23
AREF
AVCC
PB0/ICP1/CLKO/PCINT0
PB1/OC1A/PCINT1
PB2/SS/OC1B/PCINT2
PB3/MOSI/OC2A/PCINT3
PB4/MISO/PCINT4
PB5/SCK/PCINT5
PB6/TOSC1/XTAL1/PCINT6
PB7/TOSC2/XTAL2/PCINT7
PC0/ADC0/PCINT8
PC1/ADC1/PCINT9
PC2/ADC2/PCINT10
PC3/ADC3/PCINT11
PC4/ADC4/SDA/PCINT12
PC5/ADC5/SCL/PCINT13
PC6/RESET/PCINT14
IO8
IO9
IO10
IO11
IO12
IO13
XTAL 1
XTAL 2
AD0
AD1
AD2
AD3
AD4
AD5
RESET
ATMEGA328P
IO1
IO0
RI
DTR
CTS
TXD
RTS
RXD
DSR
DCD
ERROR
3V3
VCC
GND
GND
VIN
RST
R3
10k
RESET
R4
330R
IO13
ARDUINO UNO

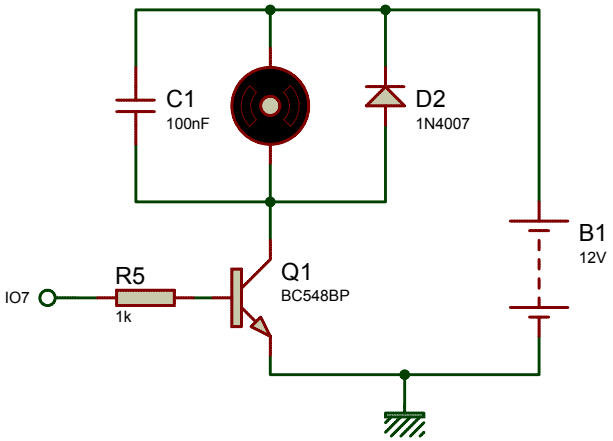
C1
100nF
D2
1N4007
B1
12V
IO7
R5
1k
Q1
BC548BP