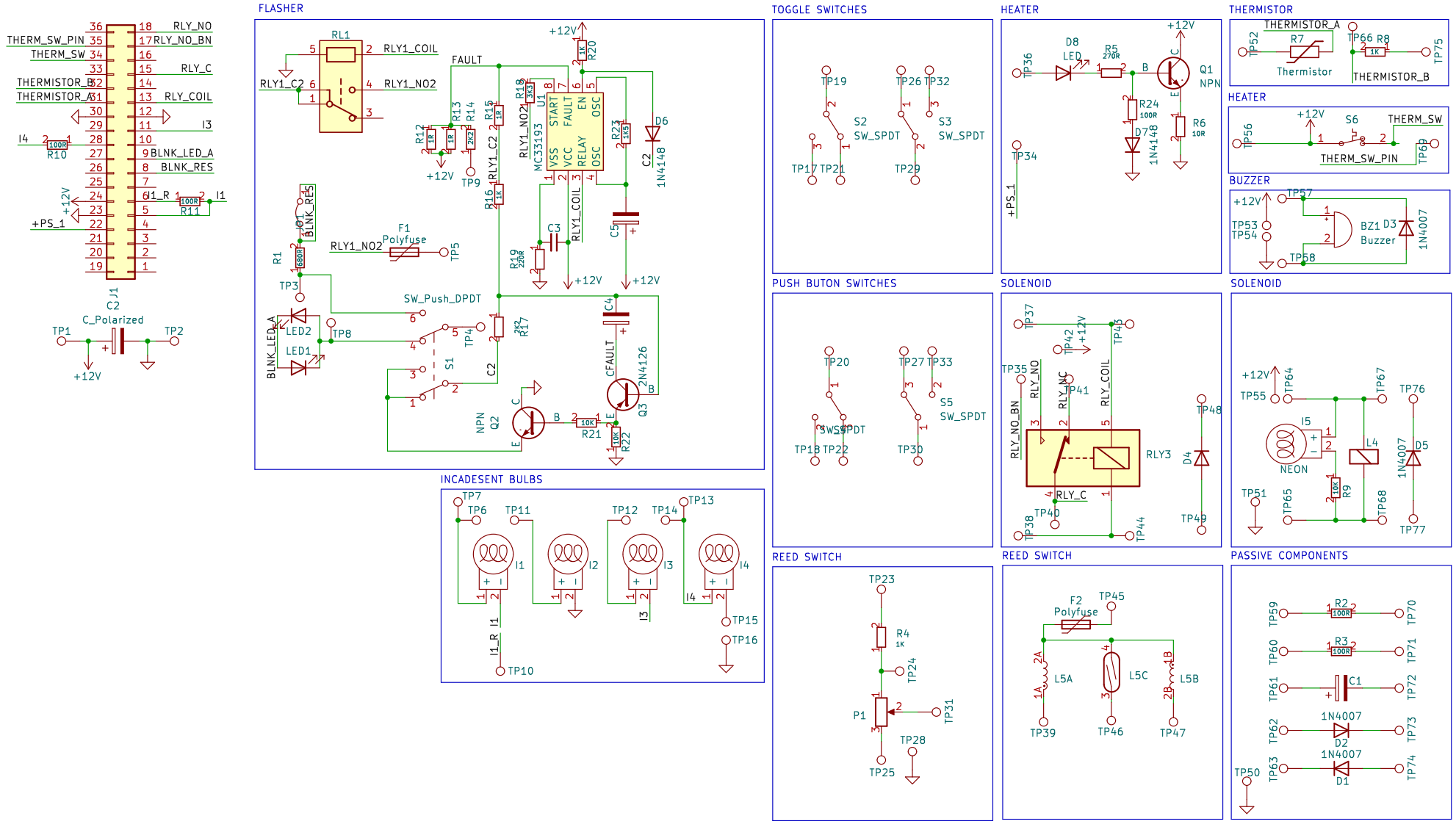
FLASHER
TOGGLE SWITCHES
HEATER
THERMISTOR
PUSH BUTON SWITCHES
SOLENOID
SOLENOID
INCADESENT BULBS
REED SWITCH
REED SWITCH
PASSIVE COMPONENTS
RLY_NO
RLY_NO_BN
THERM_SW_PIN
THERM_SW
RLY_C
THERMISTOR_B
THERMISTOR_A
RLY_COIL
I3
I4
BLNK_LED_A
BLNK_RES
I1_R
I1
+PS_1
+12V
C2
C_Polarized
TP1
TP2
RL1
RLY1_COIL
RLY1_C2
RLY1_NO2
FAULT
MC33193
START
FAULT
EN
OSC
VSS
VCC
RELAY
OSC
F1
Polyfuse
SW_Push_DPDT
S1
LED1
LED2
NPN
Q2
2N4126
Q3
CFAULT
D6
1N4148
D8
LED
Q1
NPN
D7
1N4148
Thermistor
THERMISTOR_A
THERMISTOR_B
S6
THERM_SW
THERM_SW_PIN
BZ1
Buzzer
D3
1N4007
S2
SW_SPDT
S3
SW_SPDT
S5
SW_SPDT
RLY_NO
RLY_NC
RLY_COIL
RLY_NO_BN
RLY_C
RLY3
D4
NEON
I5
L4
D5
1N4007
R9
10K
R4
1K
P1
F2
Polyfuse
L5A
L5C
L5B
R2
100R
R3
100R
C1
D2
1N4007
D1
1N4007