Licensed to [RESTU FILAELY], [PT. WAHANA DUTA JAYA RUCIKA]. Not to be distributed/networked. If you need multi-user/network access visit www.bsigroup.com/license

BS 8490:2007

BRITISH STANDARD

Guide to siphonic roof drainage systems

ICS 91.060.20; 91.140.80

British Standards

NO COPYING WITHOUT BSI PERMISSION EXCEPT AS PERMITTED BY COPYRIGHT LAW

Publishing and copyright information

The BSI copyright notice displayed in this document indicates when the document was last issued.

© BSI 2007

ISBN 978 0 580 50206 4

The following BSI references relate to the work on this standard:
Committee reference B/505
Draft for comment 06/30150944 DC

Publication history

First published March 2007

Amendments issued since publication

Amd. no.	Date	Text affected

Licensed to [RESTU FILAELY], [PT. WAHANA DUTA JAYA RUCIKA]. Not to be distributed/networked. If you need multi-user/network access visit www.bsigroup.com/license

Licensed to [RESTU FILAELY], [PT. WAHANA DUTA JAYA RUCIKA]. Not to be distributed/networked. If you need multi-user/network access visit www.bsigroup.com/license

Contents

Foreword *ii*

Introduction *1*
1 Scope *2*
2 Normative references *2*
3 Terms, definitions and symbols *2*
4 General *6*
5 Performance *7*
6 Design parameters *7*
7 Components of siphonic systems *10*
8 Hydraulic design *10*
9 Validation of designs *17*
10 Installation *17*
11 Testing and commissioning *19*
12 Maintenance, inspection and cleaning *20*
13 Information to be provided *21*

Annexes
Annex A (informative) Principles of operation of siphonic systems *23*
Annex B (normative) Testing of siphonic outlets *26*
Annex C (informative) Simplified checking procedure for siphonic systems *29*

Bibliography *31*

List of figures
Figure 1 – Principal components of siphonic roof drainage systems *3*

Summary of pages

This document comprises a front cover, an inside front cover, pages i and ii, pages 1 to 31 and a back cover.

Licensed to [RESTU FILAELY], [PT. WAHANA DUTA JAYA RUCIKA]. Not to be distributed/networked. If you need multi-user/network access visit www.bsigroup.com/license

Foreword

Publishing information

This British Standard is published by BSI and came into effect on 30 March 2007. It was prepared by Technical Committee B/505, *Waste water engineering*. A list of organizations represented on this committee can be obtained on request to its secretary.

Relationship with other publications

This British Standard should be read in conjunction with BS EN 12056-3.

BS EN 12056-3 deals with the layout and calculation of roof drainage. The provisions for non-siphonic systems are described in detail, but those for siphonic systems are limited to performance requirements. The standard applies to all materials used for roof drainage systems.

This British Standard gives information facilitating the use of BS EN 12056-3 in the United Kingdom with regard to siphonic roof drainage systems; it does not alter any of the provisions of that standard. It is based upon work carried out under a separate study part-funded by the Department of Trade and Industry as part of its Partners in Innovation scheme [1].

The study involved extensive consultation with manufacturers and installers of siphonic roof drainage systems used in the UK and also with specifiers.

Use of this document

As a guide, this British Standard takes the form of guidance and recommendations. It should not be quoted as if it were a specification and particular care should be taken to ensure that claims of compliance are not misleading.

This British Standard has been prepared to give information about the majority of installations of siphonic systems but it is impractical to cover every eventuality. In some particular cases, it might not be possible to reflect all the provisions of this standard. In such cases it is advisable to discuss any departures with the client or the client's appropriately qualified representative.

Any user claiming compliance with this British Standard is expected to be able to justify any course of action that deviates from its recommendations.

Presentational conventions

The provisions in this standard are presented in roman (i.e. upright) type. Its recommendations are expressed in sentences in which the principal auxiliary verb is "should".

Commentary, explanation and general informative material is presented in italic type, and does not constitute a normative element.

Contractual and legal considerations

This publication does not purport to include all the necessary provisions of a contract. Users are responsible for its correct application.

Compliance with a British Standard cannot confer immunity from legal obligations.

Licensed to [RESTU FILAELY], [PT. WAHANA DUTA JAYA RUCIKA]. Not to be distributed/networked. If you need multi-user/network access visit www.bsigroup.com/license

Introduction

BS EN 12056-3:2000, **6.2** specifies the performance requirements for siphonic systems as follows:

6.2.1 The system shall drain the runoff from the impermeable area served, calculated in accordance with clause **4**, without taking gutter storage into consideration. It is recommended that the recurrence period method (see **4.2.1**) should be used whenever possible.

6.2.2 For flat roof drainage, the system shall conform to clause **5.4**. For gutter drainage, the system shall conform to clauses **5.1** and **5.2**.

6.2.3 The siphonic effect shall commence quickly enough to prevent design water depths on the roof or in the gutter being exceeded.

6.2.4 The flow capacity of individual outlets shall be balanced to ensure the entire system performs as specified.

6.2.5 The siphonic system shall be designed to take into account any surcharging of the buried drainage.

6.2.6 Pipes and fittings shall withstand the maximum positive and negative pressures encountered under design conditions.

6.2.7 The minimum velocity in the system at the design rainfall shall be chosen to prevent deposition in pipework and to ensure rapid commencement of the siphonic effect.

6.2.8 Outlets shall be fitted with strainers to exclude solid material and prevent blockages. The effect of a strainer on water levels in gutters or on flat roofs shall be taken into account.

6.2.9 The minimum internal pipe diameter, d_i, shall be 32 mm.

6.2.10 The design method shall be validated by physical testing.

6.2.11 The lowest design pressure shall be chosen to prevent possible cavitation damage and collapse of pipes.

6.2.12 Reductions in diameter in the direction of flow are permitted in siphonic systems.

6.2.13 The system shall be installed in accordance with the design assumptions. The effect of any difference between the design and the system as installed shall be calculated and appropriate action taken.

Licensed to [RESTU FILAELY], [PT. WAHANA DUTA JAYA RUCIKA]. Not to be distributed/networked. If you need multi-user/network access visit www.bsigroup.com/license

1 Scope

This British Standard applies to roof drainage systems using circular-section pipes that operate under siphonic action. It does not apply to siphonic drainage systems using rectangular or trapezoidal section conduits for water conveyance.

It gives information and provides guidance on design parameters, installation, verification and maintenance needs of siphonic roof drainage systems conforming to the performance requirements specified in BS EN 12056-3:2003, **6.2**. Guidance is also given on carrying out checks of designs, for the use of specifiers and regulatory authorities.

Particular issues for site drainage systems that receive flows from siphonic roof drainage systems are also covered.

2 Normative references

The following referenced documents are indispensable for the application of this document. For dated references, only the edition cited applies. For undated references, the latest edition of the referenced document (including any amendments) applies.

BS EN 12056-3:2000, *Gravity drainage systems inside buildings – Part 3: Roof drainage, layout and calculation*

BS EN 752, *Drain and sewer systems outside buildings*

3 Terms, definitions and symbols

3.1 Terms and definitions

For the purposes of this British Standard, the terms and definitions given in BS EN 12056-3 and the following apply.

NOTE The principal components of a siphonic roof drainage system are illustrated in Figure 1.

Licensed to [RESTU FILAELY], [PT. WAHANA DUTA JAYA RUCIKA]. Not to be distributed/networked. If you need multi-user/network access visit www.bsigroup.com/license

Figure 1 **Principal components of siphonic roof drainage systems**

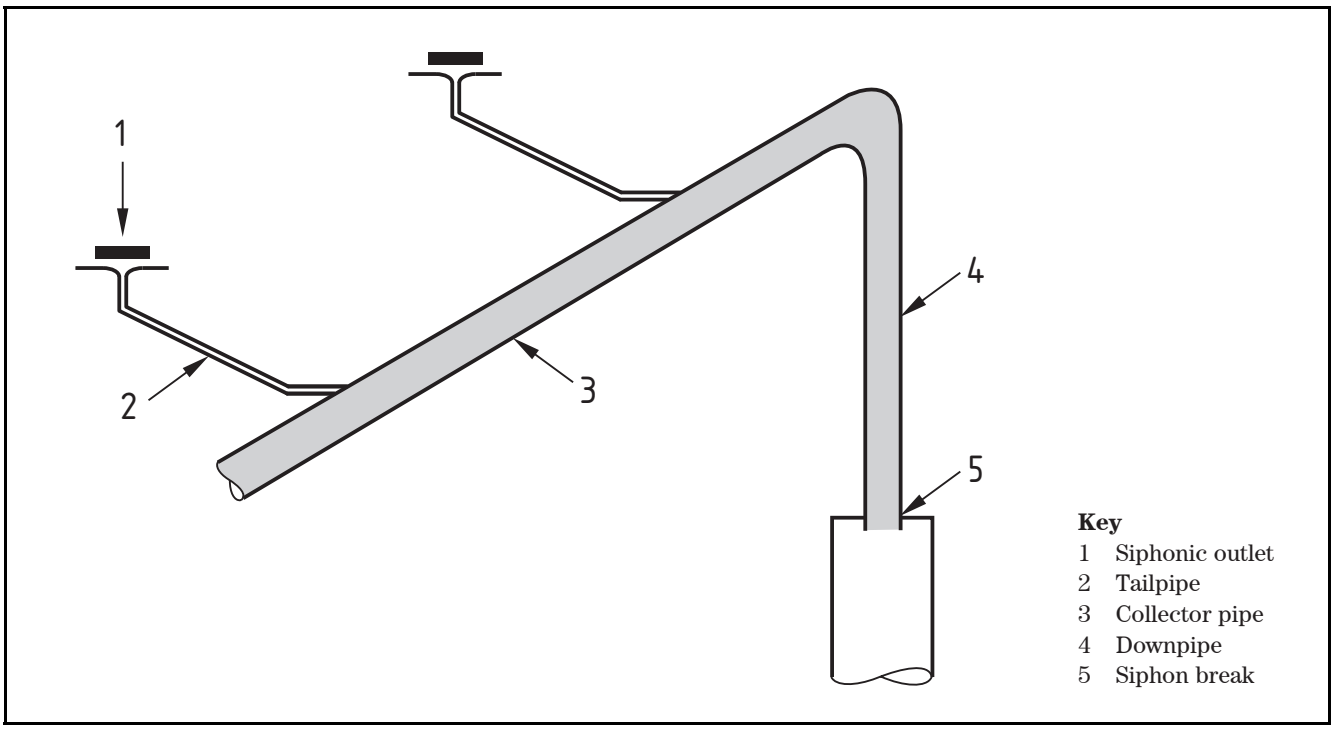

3.1.1 cavitation
phenomenon involving the formation and subsequent sudden collapse of vapour cavities in a liquid, with the cavities forming when the local pressure within the flow reduces close to that of the vapour pressure of the liquid

3.1.2 collector pipe
horizontal pipe installed below a roof, gutter or floor that collects and conveys the flow from the tailpipes of roof outlets

3.1.3 conventional roof drainage system
non-siphonic system in which the pipework between roof level and ground level is designed to flow part full with internal pressures at or above atmospheric pressure

3.1.4 design flow rate
flow rate in a siphonic roof drainage system or associated gutter, calculated using design rainfall data from BS EN 12056-3 plus a safety factor of not less than 10%

3.1.5 downpipe
section of vertical pipe in pipework connecting a collector pipe to a siphon break or to the point of discharge from a siphonic system

3.1.6 full-bore flow
flow conditions under which the water (and any entrained air carried by the water) occupies the full cross-section of a pipe

3.1.7 overflow
device installed in a gutter or flat roof that discharges the flow if the water level rises above a limiting level (e.g. due to exceptional rainfall or blockages at outlets)

NOTE Possible devices include weirs, chutes, additional conventional outlets, or additional siphonic outlets.

3.1.8 primary system
fittings and pipework designed to drain a roof or gutter for rainfall conditions up to a selected frequency of occurrence

3.1.9 rating curve of outlet
relationship between the flow rate entering an outlet and the water depth in a gutter or flat roof close to the outlet

3.1.10 secondary system
fittings and pipework designed to drain a roof or gutter if rainfall conditions exceed the capacity of the primary system or if a failure of the primary system were to occur

3.1.11 siphon break
termination point of a siphonic system at which the pressure is maintained equal to atmospheric pressure and which is designed to stop siphonic action downstream

3.1.12 siphonic outlet
fitting at the entrance to a siphonic roof drainage system to permit rainwater to drain from a roof or gutter and designed to exclude air entering the pipework

3.1.13 soffit of pipe
highest part of the internal bore of a pipe

3.1.14 tailpipe
section of vertical and possibly horizontal pipework connecting a roof outlet to a horizontal collector pipe

3.1.15 warning pipe
pipe that indicates whether the limiting water level in a gutter or flat roof has been exceeded but does not itself provide a significant discharge capacity

3.2 Symbols

For the purposes of this British Standard, the following symbols apply.

A effective roof area draining to outlet, in square metres (m^2)

d_i internal diameter of pipe, in metres (m)

g acceleration due to gravity, in metres per second per second (m/s^2)

NOTE The value of g is taken as 9.81 m/s².

H_A overall head of water available for functioning of siphonic system, in metres (m)

H_B vertical height between floor of test tank and bottom of downpipe, in metres (m)

H_D loss of water head between top of downpipe and point of discharge from system, in metres (m)

h_M minimum pressure head of water occurring in system (relative to atmospheric pressure), in metres (m)

H_O local atmospheric pressure measured above vacuum, expressed as equivalent head of water, in metres (m)

H_T total loss of water head in system between an outlet and point of discharge, in metres (m)

Licensed to [RESTU FILAELY], [PT. WAHANA DUTA JAYA RUCIKA]. Not to be distributed/networked. If you need multi-user/network access visit www.bsigroup.com/license

H_{TF}	total frictional loss of water head in system between an outlet and point of discharge, in metres (m)
H_V	velocity head of flow, in metres (m)
h	static pressure head of water at point in flow (relative to local value of atmospheric pressure), in metres (m)
h_i	value of h at point number i in system, in metres (m)
h_{min}	minimum allowable value of h in system, in metres (m)
h_{vp}	vapour pressure of water (expressed as equivalent head of water), in metres (m)
i_F	frictional head loss gradient in pipe, in metres loss of water head per metre length of pipe (m/m)
k_P	value of pipe roughness in Colebrook–White equation, in millimetres (mm)
L_P	length of section of pipe in siphonic system, in metres (m)
Q_{in}	initial flow rate of water entering collector pipe during priming of siphonic system, in litres per second (l/s)
Q_{max}	maximum flow rate of water used in test of outlet, in litres per second (l/s)
Q_o	design flow rate of water to an outlet (equal to area drained multiplied by design rainfall intensity multiplied by factor of safety), in litres per second (l/s)
Q_P	flow rate of water in pipe, in litres per second (l/s)
Q_T	flow capacity of tailpipe when acting siphonically and discharging to collector pipe at atmospheric pressure, in litres per second (l/s)
r	design rainfall intensity, in litres per second per square metre (l/s per m^2)
S	plan area of water surface in tank for testing outlet, in square metres (m^2)
S_F	factor of safety for design of siphonic system and associated gutters, applied as multiplier to flow rates determined using design rainfall intensity
T_F	time to fill siphonic pipework, in seconds (s)
u	mean flow velocity, in metres per second (m/s)
u_i	value of u at point number i in system, in metres per second (m/s)
u_E	mean flow velocity at exit from downpipe assuming full-bore flow, in metres per second (m/s)
V_P	total volume of collector pipe(s) and downpipe to the point of discharge from siphonic system, in litres (l)
Z_D	height of lip of siphonic outlet above top of downpipe, in metres (m)
z	elevation of point above datum, in metres (m)
Δh	loss of energy head in pipe length, in metres (m) (water head)
Δh_F	loss of energy head in pipe length due to wall friction, in metres (m) (water head)

Licensed to [RESTU FILAELY], [PT. WAHANA DUTA JAYA RUCIKA]. Not to be distributed/networked. If you need multi-user/network access visit www.bsigroup.com/license

Δh_L localized loss of energy head at pipe fitting, in metres (m) (water head)

Δh_o loss of energy head at siphonic outlet, in metres (m) (water head)

Δh_{12} loss of energy head between points 1 and 2, in metres (m) (water head)

Δy_{max} maximum allowable increase in water depth in non-steady test of outlet relative to steady-state water depth at same rate of flow, in metres (m)

Δz_{12} vertical height of point 1 above point 2, in metres (m)

ζ dimensionless head loss coefficient for pipe fitting

ζ_o dimensionless head loss coefficient for siphonic outlet

ν kinematic viscosity of water, in metres squared per second (m^2/s)

NOTE The value of ν for water at 15 °C is 1.14×10^{-6} m^2/s.

σ cavitation index of flow

4 General

NOTE Annex A describes how siphonic systems operate.

4.1 To ensure efficient long-term working of a siphonic system, the following points should be addressed.

- An effective periodic maintenance regime should be implemented to prevent accumulations of debris (e.g. leaves etc.) blocking rainwater outlets at roof or gutter level.
- Correctly dimensioned siphonic systems might have less reserve capacity than that of equivalent gravity systems and therefore adequate safety margins should be considered, i.e. design safety factors and/or suitable overflows should be included.
- If a siphonic system is subject to a change (during construction and/or throughout the life of the building), a hydraulic reassessment of the system should be carried out.

4.2 When operating under full-bore flow, a siphonic roof drainage system creates a direct flow path between roof level and the site drainage system to which it discharges. Problems below ground can therefore cause flooding at roof level. For this reason, siphonic systems should be designed as an integral component of the building and the drainage infrastructure of the site. Designers of buildings should therefore ensure that appropriate information on requirements for satisfactory installation and operation of siphonic systems is exchanged with others responsible for the design of roofs, gutters, structures and site drainage systems (see also Clause **13**). Specific examples include the following.

Licensed to [RESTU FILAELY], [PT. WAHANA DUTA JAYA RUCIKA]. Not to be distributed/networked. If you need multi-user/network access visit www.bsigroup.com/license

- A specifically engineered solution is required when draining sloping gutters, in order to reduce local flow velocities at outlets.
- Space provided beneath gutters for tailpipes and horizontal collector pipes should allow a vertical drop that is sufficient to permit rapid priming of the tailpipes.
- When designing the interface between the siphonic and below-ground surface water drainage systems, care should be taken to ensure that any surcharging of the below-ground drainage will not reduce the required design/discharge capacity of the siphonic roof drainage system.
- Acoustically sensitive areas within a building should be taken into account when locating routes of internal siphonic pipes (see also **10.5**).

4.3 In order to exclude air, siphonic outlets have smaller free areas than equivalent gravity outlets for the water to flow through and are therefore prone to blockage by leaves, debris, etc. In areas where leaf fall is heavy, or where other detritus can collect, a siphonic roof drainage system will require additional routine cleaning measures and access to be incorporated in the building design to minimize the amount of debris reaching the areas of the outlets.

5 Performance

BS EN 12056-3 specifies the minimum performance requirements for a siphonic system.

6 Design parameters

6.1 Design rainfall intensity and flow rates

6.1.1 Siphonic roof drainage systems should be designed to cater for the steady-state flow conditions corresponding to the design rainfall intensity, i.e. with no allowance made for any storage effects within either the gutters or the pipework.

NOTE It is important to recognize that BS EN 12056-3 does not distinguish between siphonic and conventional gravity drainage systems in the selection of the design value of rainfall intensity.

6.1.2 The return period used to determine the design rainfall intensity should be based upon the same categories of risk as described in BS EN 12056-3. The choice of return period should take account of the design life of the building, the type of roof construction, and the value of the building contents or risk to processes carried out within it. The design intensity should be based upon a peak duration of 2 min, except for special circumstances (such as green roofs or roofs designed to pond) where longer peak durations might be appropriate.

NOTE The factor S_F provides a margin of safety for siphonic systems and outlets that is similar to the margin of safety incorporated in BS EN 12056-3 for the design of non-siphonic gravity drainage systems.

6.1.3 A factor of safety, S_F, should be introduced into the design of siphonic systems and their associated gutters by sizing the components to cater for design flow rates that are S_F times those calculated using the selected value of design rainfall intensity (see **6.1.2**). The value of S_F should not be less than 1.1.

Licensed to [RESTU FILAELY], [PT. WAHANA DUTA JAYA RUCIKA]. Not to be distributed/networked. If you need multi-user/network access visit www.bsigroup.com/license

6.1.4 Designers and suppliers of siphonic systems should ensure that the systems will operate satisfactorily at all flow rates up to the maximum design condition (see **6.1.3**), with the water depths in gutters or flat roofs not exceeding those occurring at the design flow rate.

6.2 Available head

The available head for determining the flow capacity of a siphonic system should be calculated as the vertical distance from the inlet lip of a siphonic outlet to either:

- the cover level of the chamber to which the siphonic system discharges (to allow for possible surcharging of the site drainage system to ground level) (see also **8.4.6** and **8.4.7**); or
- the level of the siphon break (if one is installed and located above ground level).

6.3 Minimum pressure in pipes

The negative pressure below which cavitation can occur in the pipework of a siphonic system depends on the velocity of the flow, the degree of turbulence in the flow, the value of atmospheric pressure, and the vapour pressure at the relevant temperature of the rainwater.

Where the pipe material is known to be susceptible to damage by cavitation, the minimum design value of pressure head in the pipework should be not lower than $(2.5 - H_O)$ m; otherwise the minimum pressure should be not lower than $(1.5 - H_O)$ m, provided in all cases that the corresponding flow velocity at the point of minimum pressure is not greater than 6 m/s. If the velocity exceeds 6 m/s, a less negative value of minimum pressure head is necessary in order to prevent possible cavitation problems; see Annex A for details.

NOTE 1 The reasons for limiting negative pressures are that cavitation can cause damage in some pipe materials and could adversely affect the flow.

The allowable negative pressure for a particular system should be determined using an appropriate value for local atmospheric pressure (which depends on elevation above sea level and meteorological conditions).

NOTE 2 Standard atmospheric pressure at sea level and 15 °C is equivalent to a value of H_O of about 10.3 m water head.

BS EN 12056-3:2000, **6.2.6** requires pipes and fittings to withstand the maximum positive and negative pressures encountered under design conditions.

Licensed to [RESTU FILAELY], [PT. WAHANA DUTA JAYA RUCIKA]. Not to be distributed/networked. If you need multi-user/network access visit www.bsigroup.com/license

Licensed to [RESTU FILAELY], [PT. WAHANA DUTA JAYA RUCIKA]. Not to be distributed/networked. If you need multi-user/network access visit www.bsigroup.com/license

6.4 Minimum velocity in pipes

At the design flow rate:

- the minimum flow velocity in tailpipes, or sections of horizontal pipe longer than 1 m, should be 1.0 m/s, in order to aid the removal of air during priming and prevent the build-up of sediment or other debris in the pipes;
- the minimum flow velocity in downpipes should be 2.2 m/s, in order to promote efficient priming.

6.5 Balancing of systems

6.5.1 Siphonic roof drainage systems should be designed so that at the design flow rate (see **6.1.3**) the calculated head loss between each outlet and the point of discharge (or siphon break) is not greater than the available head (see **6.2**).

6.5.2 The maximum difference in the calculated head losses between individual outlets and the point of discharge for outlets connected to a common downpipe should be not greater than 1.0 m or 10% of the available head, whichever is the smaller.

6.6 Roof drainage

6.6.1 The depth of water that will occur in a gutter or flat roof just upstream of the outlet at the design flow rate should be determined experimentally by the manufacturer using the test procedure in Annex B. This value of water depth should be used when sizing gutters or setting the level of overflows and overspills.

6.6.2 Gutters should be sized in accordance with BS EN 12056-3. For gutters with gradients greater than 10 mm/m, measures should be incorporated to reduce the local flow velocities at outlets.

6.7 Speed of priming

6.7.1 In order to prevent flooding at roof level, siphonic systems need to be able to prime quickly and attain their design flow rate within the duration of the design storm event (see **6.1**).

6.7.2 For systems draining pitched roofs and nominally flat roofs laid to falls, the time for priming to occur should not exceed 60 s unless measures are taken to safely store rainwater that might be retained temporarily during the design storm. An approximate method for estimating the priming time is given in **8.8.2**.

Licensed to [RESTU FILAELY], [PT. WAHANA DUTA JAYA RUCIKA]. Not to be distributed/networked. If you need multi-user/network access visit www.bsigroup.com/license

7 Components of siphonic systems

7.1 General

7.1.1 Unless agreed otherwise, all components of a siphonic roof drainage system should have a design life of at least 20 years.

7.1.2 Where metallic components are used, e.g. roof outlets, precautions should be taken to avoid corrosion problems associated with dissimilar metals, including roofing and gutter materials.

7.2 Siphonic outlets

7.2.1 Siphonic outlets should minimize the amount of air and debris entering the siphonic roof drainage system.

7.2.2 Warnings should be displayed that baffles, guards and orifice plates, where fitted, on siphonic outlets need to be replaced after removal for cleaning, etc.

NOTE Failure to replace the baffle allows air into the system, which can prevent siphonic action.

7.2.3 Outlets should be designed to provide a watertight and secure fixing to the gutter or roof membrane throughout their entire design life.

7.3 Pipework

7.3.1 Pipework should be suitable to withstand the positive pressures applied during pressure testing (see **11.3**). The pipework should also be suitable to withstand the magnitude and duration of the negative pressures that might be generated during siphonic operation, taking account, if necessary, of possible ovality of the pipe (up to the permissible limit given in **10.6**). These recommendations apply equally to the pipes, fittings and joints.

7.3.2 BS EN 12056-3 specifies an internal pipe diameter of not less than 32 mm, but the risk of blockage of pipes with internal diameters less than 44 mm should be taken into account.

7.3.3 Access points for cleaning should not be included. If temporary access is required, a section of pipework should be removed and subsequently reconnected, using connections similar to those used elsewhere on the system.

8 Hydraulic design

8.1 General principles

NOTE Details of the hydraulic principles of siphonic roof drainage systems are given in Annex A.

8.1.1 In order to make full use of the available head acting between roof level and the point of discharge, the pipework in a siphonic system needs to flow at full bore. If the water flows sufficiently fast, it is able to carry some air within the flow in the form of bubbles while maintaining full-bore conditions in the pipes.

Licensed to [RESTU FILAELY], [PT. WAHANA DUTA JAYA RUCIKA]. Not to be distributed/networked. If you need multi-user/network access visit www.bsigroup.com/license

8.1.2 At low flow rates, the systems will act conventionally with atmospheric pressure throughout. At higher rates, some of the pipes will begin to flow at full bore and develop sub-atmospheric (negative) pressures. At the design flow rate or lower, all the pipes should be able to flow at full bore. Siphonic systems need to operate satisfactorily at all flow rates up to the design value. At lower flow rates, the resulting water depths in a gutter or flat roof drained by a siphonic system should not exceed the depths occurring at the design rate.

8.1.3 Siphonic systems should be able to fill by evacuating air from initially empty pipes and by limiting entry of air at the outlets so as to produce full-bore flow and enable the design flow rate to be achieved without excessive water depth in the gutter or flat roof (see BS EN 12056-3:2000, **6.2.3**). For pitched roofs and flat roofs that are laid with integral falls, the priming process should take place sufficiently rapidly to allow systems to cope with peak rainfall rates occurring in a 2 min period. The peak rate might be part of a longer storm so it is not appropriate to reduce the design rainfall intensity on the basis of temporary storage in gutters or around outlets in nominally flat roofs having internal falls.

8.1.4 If a siphonic system is designed to achieve the design flow rate (see **6.1.3**) with all the pipes flowing 100% full of water, the layout and sizes of the pipework can be determined using the Bernoulli equation (see **A.2**), the design parameters in Clause **6**, and appropriate formulae or published data for the head loss characteristics of the pipes [2] and fittings [3, 4] (see **8.4** and Annex A).

8.1.5 If a siphonic system is designed to achieve the design flow rate with the pipes flowing at full bore but with a mixture of air and water, the design procedure used should be based on appropriate hydraulic principles that have been verified experimentally. The basis of the design procedure and the experimental data supporting it should be available in a technical paper or report that has been subject to independent peer review.

8.2 Siphonic outlets

8.2.1 Siphonic outlets should be positioned so that they drain the roof effectively and receive flow rates that allow satisfactory balancing of the system. Where possible, the arrangement of the roof drainage should be such that any minor imbalance between flow rate and flow capacity at an individual outlet can be corrected by redistribution of flow between adjacent outlets, e.g. by locating outlets in a gutter or channel.

8.2.2 The rating curve of the outlet should be established by test using the procedure given in Annex B.

8.2.3 Outlets in gutters should normally be located so that the flow rates approaching the outlets from either side are approximately equal, unless a specifically engineered solution based on manufacturer's test data is provided.

NOTE If the flow rates are unbalanced, increased swirl can develop around an outlet and cause air to be drawn into the siphonic system.

Licensed to [RESTU FILAELY], [PT. WAHANA DUTA JAYA RUCIKA]. Not to be distributed/networked. If you need multi-user/network access visit www.bsigroup.com/license

8.3 Roof drainage

Gutters drained by siphonic outlets should be designed using the calculation procedures given in BS EN 12056-3. The depth of flow occurring at the downstream end of a gutter length at the design rainfall intensity should be determined from the rating curve of the outlet using the design flow rate (see **6.1.3**).

8.4 Design of pipework

8.4.1 An appropriate design for a siphonic system should be determined by calculating the total head losses in the pipes and fittings at the design flow rate (see **6.1.3**), and ensuring that they do not exceed the available head (see **6.2**), while also ensuring that the recommendations given in Clause **6** for minimum pressure, minimum velocity, degree of balancing between outlets, and speed of priming are met.

8.4.2 Values of pressure and velocity in the pipes should be calculated at all changes of direction or diameter in a system in order to ensure that the lowest values of these parameters are identified and are within the allowable limits. Particular attention should be given to the pipework at or near the top of the downpipe because the lowest pressures normally occur near this point.

8.4.3 The head losses in straight lengths of pipe should be calculated using an established hydraulic equation or a corresponding set of flow tables or charts. In case of dispute, the Colebrook–White equation [2] should be used (see Annex A and cf. BS EN 12056-3:2000, **6.3.1**).

8.4.4 When calculating the flow capacity of a system, the value of pipe roughness used should take account of the effects of pipe joints, ageing and possible deposition of fine sediment washed through the outlets. For the Colebrook–White equation [2], the minimum value of pipe roughness used for design should be k_P = 0.15 mm.

8.4.5 Head loss coefficients for the types of pipe fitting used in the system (e.g. bends, reducers, increasers, junctions, etc.) should be determined from tests or obtained from appropriate published data [3, 4]. Loss coefficients for a given geometry of pipe junction can vary according to the relative flow rates in the branches. The loss coefficient for the siphonic outlets should be determined by test using the procedure given in Annex B.

8.4.6 Pressures in a siphonic system should be calculated starting at its downstream end and working upstream (see Annex A). Unless a suitably designed siphon break is installed (see **8.10.4** to **8.10.6**), account should be taken of possible surcharging in the downstream site drainage system when determining the flow capacity of the siphonic drainage system. If the first downstream manhole or chamber has a suitable vented cover (see **8.10.1**), it may be assumed that the positive pressure head acting at the point of discharge from the siphonic system will not be greater than the height of the vented cover above the end of the last pipe. If a siphon break is used above ground level, atmospheric pressure may be assumed to apply at the siphon break provided that it is fully ventilated and that no surcharging to that level can occur from the downstream site drainage system.

8.4.7 A separate calculation should be carried out on siphonic systems for minimum pressure, assuming no surcharging in the first downstream manhole or chamber and using a value of pipe roughness for the siphonic system that is appropriate for the pipes when new [2].

8.4.8 Computer programs used to design siphonic systems should be validated against experimental data from physical testing of representative systems (see BS EN 12056-3:2000, **6.2.10**).

8.4.9 Orifice plates should only be used at outlets and should be not less than 32 mm in diameter.

8.5 Tailpipes

8.5.1 Tailpipes should have a sufficient vertical drop between the outlet and the collector pipe to produce high flow velocities and rapid priming of the tailpipe during the initial filling of the siphonic system (see also **8.8.2**).

8.5.2 An expansion in pipe size in the vertical section of a tailpipe can prevent priming and should not be used unless satisfactory performance with the specified expansion has been demonstrated by type testing.

8.5.3 Tailpipes should be formed from vertical and horizontal sections, as sloping tailpipes can fail to prime.

8.6 Collector pipes

Reducers and increasers used in horizontal collector pipes of siphonic systems should have shapes that will prevent air pockets being trapped during the priming process. Maintaining a continuous soffit level through transitions facilitates the removal of air and can be achieved using asymmetrical fittings.

8.7 Downpipes

8.7.1 An expansion in pipe size in a downpipe can prevent satisfactory priming of the whole system and is not permitted except at a siphon break (see **8.10.4** to **8.10.6**) or in an offset that has been validated by type testing.

8.7.2 The use of a 90° elbow at the top of a downpipe is not recommended because of the increased risk of cavitation compared with using a 90° radius bend (i.e. centreline radius greater than the pipe diameter) or two 45° bends.

8.7.3 Sloping (non-vertical) downpipes should only be used in situations that have been validated by type testing.

NOTE Sloping downpipes tend to slow down or even prevent the onset of priming.

8.8 Priming

8.8.1 The time needed for a siphonic system to prime depends on many independent factors, and a general method of prediction is not available. It is therefore recommended either to carry out type testing of comparable systems, or to estimate the filling time of the system under design conditions in accordance with **8.8.2**. The time should not exceed 60 s unless measures are taken to safely store rainwater that might be temporarily retained during the design storm (see **6.7.2**).

Licensed to [RESTU FILAELY], [PT. WAHANA DUTA JAYA RUCIKA]. Not to be distributed/networked. If you need multi-user/network access visit www.bsigroup.com/license

8.8.2 To facilitate priming during major storms, the tailpipes need to be able to discharge flow into the collector pipe and downpipe at a rate that is sufficient to produce negative pressures quickly within the system. The following check of the priming performance should be made [1]. Calculate the flow capacity, Q_T, of each of the tailpipes assuming it to be acting independently of the rest of the system with the tailpipe operating siphonically but discharging at atmospheric pressure into its collector pipe. Add together all the values of Q_T to obtain the total initial flow rate, Q_{in}, entering the collector pipe (or collector pipes, if more than one is connected to the same downpipe). Estimate the filling time, T_F, of the siphonic system using equation (1).

$$T_F = \frac{1.2V_P}{Q_{in}} \quad (1)$$

NOTE The factor of 1.2 in equation (1) allows for the time needed to produce full-bore flow conditions in the pipework.

8.9 Primary and secondary systems

8.9.1 If the size or layout of a roof area makes it difficult to design a single siphonic system that will operate satisfactorily and conform to the appropriate provisions (i.e. the requirements specified in BS EN 12056-3 and the recommendations given in Clause **6** of the present standard), it might be necessary to divide the drained area into two or more parts served by separate siphonic systems, each with its own downpipe and discharge arrangements.

8.9.2 An alternative method is to drain the roof area using separate primary and secondary siphonic systems. Primary and secondary systems should operate completely independently of each other. The primary system can be designed to deal with all lower return period storms up to a specified rainfall intensity, with the secondary system dealing with more intense storms up to the maximum design intensity for the scheme. This can be achieved by preventing flow from entering the outlets of the secondary system until water levels in the gutter or flat roof exceed a certain limit. When designing gutters drained by primary and secondary systems, the increase in water depths produced by the secondary outlets should be taken into account when applying the calculation methods in BS EN 12056-3. The increased time needed for the priming of separate primary and secondary systems should also be considered in relation to the recommendations in **6.7** and **8.8.2**.

8.9.3 When installed in a gutter, the outlets of a secondary system should be spaced so as to prevent large variations of flow rate along the length of the gutter. Also, the outlets of the two systems need to be placed far enough apart for the secondary outlets not to prevent satisfactory operation of the primary outlets (see also **8.2.3**).

8.9.4 If the secondary system is not connected to the site drainage system but is arranged to discharge at ground level or above, precautions should be taken to prevent the high velocity flow discharged from the system causing unwanted flooding or erosion at ground level and hazards to people in the vicinity. Vermin guards should not be fitted to above-ground outlets of secondary systems because of the risk of blockage by debris.

Licensed to [RESTU FILAELY], [PT. WAHANA DUTA JAYA RUCIKA]. Not to be distributed/networked. If you need multi-user/network access visit www.bsigroup.com/license

Licensed to [RESTU FILAELY], [PT. WAHANA DUTA JAYA RUCIKA]. Not to be distributed/networked. If you need multi-user/network access visit www.bsigroup.com/license

8.10 Discharge arrangements

8.10.1 Where possible, it is recommended to continue the pipework of the siphonic system outside the building so that the flow can be discharged into a below-ground chamber connected to the site drainage system. The chamber should be fitted with a vented cover (with the area of vents equal to at least twice the cross-sectional area of the siphonic pipe entering the chamber) so that surcharging in the site drainage system cannot cause the downstream pressure head on the siphonic system to exceed cover level. The flow capacity of the siphonic system should be determined taking account of the length of pipework to the chamber and the available head measured to cover level (see **6.2**).

NOTE Often the underground pipework is outside the responsibility of the siphonic roof drainage supplier for contractual reasons.

8.10.2 Where a siphon break is provided at an interface between separate construction contracts, e.g. just above floor level, the first manhole outside the building should be vented.

8.10.3 The exit velocity from a siphonic system into a drainage chamber should not exceed 3 m/s at the design rate of flow of the siphonic system (see **6.1.3**).

8.10.4 If a siphonic system is connected directly to a site drainage system without an intervening chamber or manhole, a siphon break may be installed at the point of connection between the two systems. The purpose of the siphon break is to maintain atmospheric pressure at the downstream end of the siphonic system and prevent gravity drainage pipes in the site system from being subjected to negative pressures.

8.10.5 A siphon break normally consists of a vertical, non-tapered expansion between the end of the siphonic pipework and a gravity drainage pipe of larger diameter. It is recommended that the cross-sectional area of the downstream pipe should be at least twice that of the upstream pipe.

8.10.6 A siphon break will only operate as intended if the jet of water discharging from the siphonic pipe is surrounded by air at atmospheric pressure. This may be achieved by supplying air to the siphon break through a suitably designed ventilation system. If the siphon break requires ventilation from downstream to maintain atmospheric pressure, the pipes in the downstream drainage system connecting to the first ventilated manhole should be large enough not to flow more than 70% full at the design rate of flow from the siphonic system (see **6.1.3**). If a siphon break is more than 3 m above ground level, it might not reliably break the siphonic effect.

8.11 Overflows

8.11.1 All roof drainage systems should be designed to minimize the risks of water entry into the building in the event of extreme rainfall conditions or the effects of blockages.

8.11.2 Where agreed by the building design team, short-term retention of water on a roof drained by siphonic systems may be incorporated into the design provided that the gutters and roofing are fully watertight to an appropriate level and that the roof has sufficient strength. However, in these circumstances, a suitable overflow system or set of warning pipes should be installed to indicate if water depths are exceeding the design limits for the drainage system.

8.11.3 Overflows or emergency outlets should be provided on flat roofs with parapets and in non-eaves gutters in order to reduce the risk of overspilling of rainwater into a building or structural overloading.

8.11.4 The overflow system may be provided by weirs discharging at roof level, by conventional outlets and pipework, or by a separate siphonic system (see **8.9.2**). Non-siphonic overflow systems should be designed in accordance with BS EN 12056-3.

8.12 Site drainage

8.12.1 Although flow velocities in a roof drainage system operating siphonically are normally much higher than in a conventional gravity system, the total flow rate discharged from a building under design conditions will be the same. Therefore site drainage systems should in both cases be designed in accordance with BS EN 752.

8.12.2 The damage caused by an underground drain being overwhelmed is significantly less than that caused by overspill into a building due to failure of a roof drainage system. Therefore, taking account of the time needed for flow to reach and fill a drain, drains receiving flows from siphonic roof drainage systems should be sized on the same basis as those receiving flows from gravity roof drainage systems. In the vicinity of a building, this would normally involve designing for pipe-full flows at a constant rainfall rate corresponding to a 5 min duration storm with a return period of 1 year (but see **8.10.6** for the case of a siphon break installed within a siphonic system).

8.12.3 The first external chamber should be vented in order both to break any siphonic action that could be operating and to act as a relief for excess flows. The area of vent should be not less than twice the cross-sectional area of the incoming siphonic pipe.

8.12.4 The designers of the site drainage and the siphonic roof drainage should liaise to ensure that suitable measures are incorporated to break the siphonic action.

NOTE If the pipes connecting to the site drainage system were unintentionally to operate siphonically, greater negative pressures than allowed for in the design could occur within the siphonic system, potentially leading to failure.

Licensed to [RESTU FILAELY], [PT. WAHANA DUTA JAYA RUCIKA]. Not to be distributed/networked. If you need multi-user/network access visit www.bsigroup.com/license

Licensed to [RESTU FILAELY], [PT. WAHANA DUTA JAYA RUCIKA]. Not to be distributed/networked. If you need multi-user/network access visit www.bsigroup.com/license

9 Validation of designs

9.1 Outline checks

9.1.1 The detailed hydraulic design of a siphonic roof drainage system requires the head loss and pressure in each pipe length and fitting to be calculated accurately. Due to the complexity of most systems, the sizing of the pipework is normally done using a specialist computer program and cannot easily be checked by hand calculations.

9.1.2 If it is necessary to carry out an approximate check of the suitability of a siphonic system, the simplified procedure described in Annex C may be used. However, this type of check is only indicative and is not a substitute for the detailed calculations that are needed to design a system for installation.

9.2 Design software

Computer programs used to design siphonic roof drainage systems should be based on established hydraulic principles. Predictions of flow capacity and pressure should be independently validated against experimental data from physical testing of representative systems.

10 Installation

10.1 Preventing blockages during construction

10.1.1 The risks of debris and other materials being washed, brushed or dropped into the pipework of siphonic systems during construction should be assessed and appropriate control measures applied at all stages of construction from installation of the system to final completion of the building.

10.1.2 Care should be taken as the installation progresses to check the inside of pipework for cleanliness and to remove any material that might have entered. Temporary caps or stoppers should be used on open ends to prevent the ingress of debris, vermin, etc.

10.1.3 Outlets should be installed in the flat roof or gutter in accordance with the manufacturer's recommendations.

10.1.4 Baffles and leafguards should be installed as soon as possible, in order to prevent entry of coarse debris into the systems.

10.2 Pipework jointing

10.2.1 All joints should be watertight under positive internal pressures (including positive pressure due to a blockage) and airtight under internal negative pressures likely to occur in operation.

10.2.2 The connection between the outlet and tailpipe should accommodate vibration and relative movements likely to occur.

10.2.3 For polyethylene pipework up to DN63, sleeve joints should be used in order to avoid internal beads. Butt welding may be used on pipework greater than DN63. When carrying out butt welding, care should be taken to align any ovality of the two pipes being jointed (see **10.6**).

10.2.4 For polyethylene pipework of DN100 and above, butt welding should be carried out using a butt welding machine that clamps pipework securely and uses hydraulic rams (controlled either fully automatically or by reference to pressure gauges) so as to ensure that the pipe manufacturer's specified soak, weld and cooling pressures are applied. Butt jointing of pipework of DN100 and above using methods which rely on manual pressure via levers, ratchets or straps should not be used.

10.3 Fixings and support

10.3.1 Pipework and its fixing system should accommodate all thermal movements likely to be expected over the lifetime of the building. Particular care should be taken where pipework crosses building expansion joints. Thrusts in pipework due to water pressure acting on bends and other fittings should be accommodated in the pipework and fixings; the design should make allowances for temporary high pressures that could be used during pressure testing. Fixings and supports should be designed on the assumption that the pipework is full of water and should take account of loads occurring during installation and maintenance.

10.3.2 Particular care should be taken to support tailpipes in such a way that thrusts, thermal movements and vibration are not transmitted to outlets.

NOTE Failure to do this could result in leakage between the outlet and the gutter/roof membrane.

10.3.3 Lateral restraint and anchoring should be installed to prevent any swinging of pipework.

10.3.4 The effects of thermal expansion should be taken into account by either:

- restraining pipework against movement;
- incorporating expansion loops on horizontal pipework (particularly where pipework crosses building expansion joints); or
- arranging supports to allow downpipes to deflect.

10.4 Insulation/trace heating

Anti-condensation measures should be applied where appropriate.

Trace heating to prevent pipework from freezing in cold weather is not normally required in the UK. However, in particularly cold places, this could be considered in order to ensure that the system remains free-flowing.

10.5 Acoustic insulation

Insulation to limit noise should be considered for sensitive locations, such as theatre auditoria, or in dwellings or commercial buildings.

NOTE Acoustic analysis and design is outside the scope of this British Standard and an acoustic specialist should be employed.

Licensed to [RESTU FILAELY], [PT. WAHANA DUTA JAYA RUCIKA]. Not to be distributed/networked. If you need multi-user/network access visit www.bsigroup.com/license

Licensed to [RESTU FILAELY], [PT. WAHANA DUTA JAYA RUCIKA]. Not to be distributed/networked. If you need multi-user/network access visit www.bsigroup.com/license

10.6 Tolerances

The maximum ovality of installed pipes (i.e. the difference between the minimum and maximum diameter measured at a single cross-section) should not exceed half of the pipe wall thickness.

10.7 Changes from design

The installed system should not differ from the design drawings or be subject to modification during the life of the building without the changes being referred to the designer for recalculation.

10.8 Health and safety

Due to suction in the system, guards and baffles should not be removed when the system is running. Otherwise, there are no particular health and safety issues associated with siphonic roof drainage systems beyond those for a gravity roof drainage system.

11 Testing and commissioning

11.1 Inspection

11.1.1 The system should be inspected for any visible defects and tested before any insulation, boxing-in, etc. is installed. If a risk assessment identifies the need for a commissioning inspection, tailpipes should be checked internally for possible blockages using an endoscope or other suitable method.

11.1.2 The inspection should also determine whether the system as installed conforms to the design. Any discrepancies should be referred back to the designer to assess whether any remedial works are required.

11.2 Flow testing

It is impractical to flow test an installed siphonic roof drainage system under its design conditions. Therefore no flow testing is possible other than to demonstrate that the system is free flowing.

11.3 Positive pressure testing

11.3.1 The system should be tested (see **11.3.2** and **11.3.3**), either in parts or as a whole, to check its integrity against positive pressures.

NOTE Negative pressure testing is considered to be impractical.

11.3.2 Internal rainwater pipes should be tested with water to whatever pressure is likely to be exerted within the pipe in the event of a blockage occurring.

11.3.3 Internal rainwater pipes should be capable of withstanding a constant air pressure of 38 mm water gauge for a period of 3 min, after equilibrium has been established. Any drop in pressure should be investigated, remedial works undertaken and the system retested until no pressure drop is observed.

NOTE Additional testing can, if it is wished, be specified in a contract.

11.4 Handover

Immediately prior to the system being brought into operation, it should be cleaned to remove any debris that could have entered the system after completion. Alternatively, if the system has been sealed to prevent the ingress of debris, all seals should be removed immediately prior to handover.

NOTE Roof drainage systems are generally installed and brought into use prior to completion of the construction of the building.

12 Maintenance, inspection and cleaning

12.1 Gutters, rainwater pipes, outlets and gratings should be inspected and thoroughly cleaned once a year, or more often if the building is in or near an industrial area or is near to trees or might be subjected to extremes of temperature. The frequency of inspection and maintenance will need to be based upon local experience. Defects should be remedied as soon as possible after being noted.

NOTE During the first year of operation, it is recommended that inspection, etc. should be carried out four times a year in order to establish an appropriate maintenance regime. The regime should take account of autumn leaf fall and the fact that intense rainfall tends to occur during summer storms.

12.2 After any works on the roof, all debris should be removed and the outlets cleaned.

12.3 Where practicable, supports and fixings should be inspected annually and tightened and adjusted as necessary.

12.4 All cleaning, inspections, works, repairs, tests and any other relevant information should be kept in a maintenance log.

12.5 Baffles should not be removed except temporarily for cleaning.

Licensed to [RESTU FILAELY], [PT. WAHANA DUTA JAYA RUCIKA]. Not to be distributed/networked. If you need multi-user/network access visit www.bsigroup.com/license

Licensed to [RESTU FILAELY], [PT. WAHANA DUTA JAYA RUCIKA]. Not to be distributed/networked. If you need multi-user/network access visit www.bsigroup.com/license

13 Information to be provided

13.1 By the specifier

Upon request, the specifier should provide the siphonic roof drainage designer with the following information:

a) location of building, and height of building above ordnance datum, drawing attention to any climatic peculiarities;

b) required design storm return period, or category of storm and design life of building;

c) roof plan, indicating areas to be drained;

d) roof covering and height of potential leakage paths into the building;

e) gutter positions and initial sizes;

f) preferred outlet positions;

g) overflow positions;

h) preferred downpipe routes;

i) temperature and humidity of rooms and spaces intended to be heated;

j) decibel rating of rooms and spaces intended for quiet activities (e.g. sleeping, auditoria, studios) – generally available in room data sheets;

k) building use, rooms and spaces intended to house valuable items or sensitive equipment, positions and types of existing trees;

l) positions and types of proposed soft landscaping;

m) levels of roofs and external ground;

n) structural arrangements of roof, including any upstand or downstand beams;

o) location of building movement joints;

p) maximum allowable depth of water on roof;

q) details of connections to site drainage system;

r) CDM [5] risk assessment, highlighting any abnormal factors and proposed means of maintenance access on the roof;

s) which party is responsible for the installation of the siphonic outlets;

t) any other relevant information.

13.2 By the system designer/installer

Upon request, the designer of the siphonic roof drainage system should provide the following information:

a) confirmation of design rainfall intensity and factor of safety used (see **6.1.3**);

b) schematic pipework layout, including outlet positions;

c) identification of primary and secondary systems;

d) pipework lengths and levels;

e) calculated maximum depth of water on the roof during the design storm;

f) pipework type and strength classification;

g) minimum flow velocity under design conditions;

h) hydraulic head loss factors used in design;

i) maximum amount of entrained air assumed in design;

j) maximum imbalance in head loss between outlets;

k) maximum positive and negative pressures (at both k_P = 0.15 mm and k_P = roughness of pipe when new);

l) estimated time for priming of systems;

m) agreed point of connection with site drainage system and details;

n) builders' work requirements for item m);

o) CDM [5] risk assessment, CDM method statement;

p) method of fixing outlet to gutter/roof membrane;

q) methods of supporting and fixing pipework;

r) builders' work requirements for item q);

s) structural loads imposed by siphonic systems;

t) method of dealing with expansion forces;

u) inspection and test certificates;

v) maintenance manual, including as-built information.

Licensed to [RESTU FILAELY], [PT. WAHANA DUTA JAYA RUCIKA]. Not to be distributed/networked. If you need multi-user/network access visit www.bsigroup.com/license

Licensed to [RESTU FILAELY], [PT. WAHANA DUTA JAYA RUCIKA]. Not to be distributed/networked. If you need multi-user/network access visit www.bsigroup.com/license

Annex A (informative) Principles of operation of siphonic systems

A.1 General

This annex describes the hydraulic principles that are applicable to the design of siphonic roof drainage systems when operating with full-bore flow and 100% water in the pipes. At low rates of flow, siphonic systems behave like conventional systems in which the pipework flows part-full of water and at atmospheric pressure; calculation methods for non-siphonic conditions are given in BS EN 12056-3. This annex also includes information on factors that can cause cavitation in siphonic systems.

A.2 Bernoulli equation

In a fluid, the relationship between changes in pressure head, velocity and elevation can be determined by considering changes in the kinetic and potential energy of the fluid. For steady-state flow conditions between two points in a fluid, the Bernoulli equation gives:

$$\left(h_1 + \frac{u_1{}^2}{2g}\right) - \left(h_2 + \frac{u_2{}^2}{2g}\right) = \Delta h_{12} - \Delta z_{12} \qquad \text{(A.1)}$$

where point 1 is upstream of point 2.

Equation (A.1) can be used to determine the static pressure head at any point in a siphonic system provided that the pipes are flowing at full bore and the fluid is homogeneous and of constant density (e.g. 100% water). Methods of determining values of the energy head loss, Δh, in pipes and fittings are given in **A.3** and **A.4**.

The following procedure can be used to analyse a siphonic system in which the positions and dimensions of all the pipes and fittings are known or have been assumed.

a) Determine the value of the design flow rate entering each outlet of the system from the individual area drained, the design rainfall intensity and the selected factor of safety (see **6.1.3**).

b) Divide the pipework system into a series of convenient sections determined by changes in pipe diameter, positions of pipe fittings, etc. Calculate the flow rate and flow velocity in each section of pipe using the information on the flow rates entering at the outlets.

c) Start at the downstream end of the system (point 2) where the exit velocity, u_2, and the static pressure head, h_2, are known. If the system discharges into a vented chamber, the value of h_2 should be taken as equal to the hydrostatic pressure head occurring if the chamber were to be surcharged to cover level (see **6.2**). If the system discharges at a siphon break, h_2 should be taken as zero (i.e. equal to local atmospheric pressure); see **8.10.4** to **8.10.6**.

d) Determine the change in elevation, Δz_{12}, in the first upstream section of pipework (to point 2), and find the corresponding head loss, Δh_{12}, from **A.3** and/or **A.4**.

e) Use the known velocity, u_1, at point 1 and equation (A.1) to find the unknown pressure head, h_1, at this point.

f) Repeat the calculations for each pipe section in turn to find the value of static pressure head at each outlet in the system. Note that on the upstream side of the outlet (i.e. in the gutter or flat roof) the velocity is low and can be effectively assumed to have a value of $u_1 = 0$.

g) If the calculated value of h_1 on the upstream side of the outlet is greater than zero, this implies that the siphonic system has insufficient flow capacity and will cause local surcharging at that point.

h) If the calculated value of h_1 is less than zero, this implies that the system has some reserve capacity. Limits are given in **6.5.2** for the values of the reserve capacities at individual outlets.

i) Check the results to ensure that the recommendations for minimum pressure head and minimum velocity given in **6.3** and **6.4** are met at all points in the system.

A.3 Colebrook–White resistance equation

The loss of energy head, Δh_F, due to wall friction in a length of pipe between points 1 and 2 in a system is given by:

(A.2) $$\Delta h_F = i_F L_p$$

The frictional head loss gradient, i_F, can be determined from the Colebrook–White equation [2], which for pipes flowing 100% full of water may be written in the form:

(A.3) $$i_F = \left(\frac{u^2}{8gd_i}\right)\left\{\log_{10}\left[\frac{k_p}{3710d_i} + \frac{1.775\nu}{\sqrt{(gi_F d_i^{\,3})}}\right]\right\}^{-2}$$

NOTE An iterative method of solution is required to find the head loss gradient, i_F, from equation (A.3) because this quantity also appears on the right-hand side of the equation.

A.4 Head losses at pipe fittings

The local head loss, Δh_L, at a pipe fitting can be determined from:

(A.4) $$\Delta h_L = \zeta \frac{u^2}{2g}$$

Values of the head loss factor ζ are given in standard references [e.g. 3, 4] for bends, junctions, reducers and increasers. The value of the loss factor for a siphonic outlet depends on the particular design and should be determined using the test procedure given in Annex B.

A.5 Cavitation

The potential for cavitation to occur in flowing water can be determined from the value of the cavitation index, σ, defined as:

(A.5) $$\sigma = \frac{2g(h + H_O - h_{vp})}{u^2}$$

where h and u are the local values of static pressure head and flow velocity at the point being considered. The vapour pressure increases with temperature and in the case of water its value varies from $h_{vp} = 0.12$ m at 10 °C to $h_{vp} = 0.57$ m at 35 °C.

Licensed to [RESTU FILAELY], [PT. WAHANA DUTA JAYA RUCIKA]. Not to be distributed/networked. If you need multi-user/network access visit www.bsigroup.com/license

Turbulence and local flow curvature can reduce instantaneous pressures in a siphonic system below the mean values calculated using equation (A.1). If the instantaneous pressure reduces close to the vapour pressure of the liquid, vapour cavities will be formed within the flow and carried downstream. When the cavities enter regions of higher pressure, they tend to collapse suddenly, producing localized impact pressures that can be high enough to damage the walls of pipes and fittings. The greater the amount of turbulence and local flow curvature caused by a joint or pipe fitting, the higher is the value of mean static pressure at which cavitation will begin.

Measurements of the conditions under which cavitation occurs with different types of joint irregularity or pipe fitting are used to determine limiting values of the cavitation index. If the value of σ in equation (A.5) corresponding to the flow conditions is less than the limiting value for that particular type of fitting or irregularity, cavitation will occur.

Reviews of test data [e.g. 6, 7] suggest that cavitation is likely to occur at a point in a siphonic system if the local value of the cavitation index is less than about $\sigma = 1.5 - 2.0$, depending on the particular geometry of the pipe fitting or the size of the joint irregularity. The amount of damage caused by cavitation tends to increase as the value of σ reduces and also depends on the pipe material and the length of time for which the cavitation occurs.

For pipework materials that are readily damaged by cavitation (including most metals and rigid materials), **6.3** recommends a minimum design pressure head of $h_{min} = (2.5 - H_O)$ m. This is based on a minimum cavitation index of $\sigma = 1.2$ and a maximum flow velocity of $u = 6$ m/s at a water temperature of about 25 °C. Values of h_{min} for higher velocities and for vapour pressures at other water temperatures can be calculated from:

(A.6) $$h_{min} = 0.06u^2 + h_{vp} - H_O$$

For pipework materials that are resistant to cavitation damage (including some plastics such as polyethylene and some types of stainless steel), **6.3** recommends a minimum design pressure head of $h_{min} = (1.5 - H_O)$ m. This is based on a minimum cavitation index of $\sigma = 0.6$ and a maximum flow velocity of $u = 6$ m/s at a water temperature of about 25 °C. Values of h_{min} for higher velocities and for vapour pressures at other water temperatures can be calculated from:

(A.7) $$h_{min} = 0.03u^2 + h_{vp} - H_O$$

Licensed to [RESTU FILAELY], [PT. WAHANA DUTA JAYA RUCIKA]. Not to be distributed/networked. If you need multi-user/network access visit www.bsigroup.com/license

Licensed to [RESTU FILAELY], [PT. WAHANA DUTA JAYA RUCIKA]. Not to be distributed/networked. If you need multi-user/network access visit www.bsigroup.com/license

Annex B (normative) Testing of siphonic outlets

NOTE This annex replaces the guidance given in BS EN 12056-3:2000, National Annex NF, which is expected to be withdrawn by amendment upon publication of this British Standard.

B.1 General

This annex gives test methods for determining flow rating curves and head loss coefficients for siphonic outlets.

The tests described are appropriate for outlets that are installed in gutters or flat roofs and used as inlets to pipework systems that are designed to act siphonically. The tests have three purposes:

a) to determine the relationship between the flow rate entering the outlet and the depth of water in the gutter or on the flat roof at the approach to the outlet;

b) to check the effectiveness of the outlet at preventing entry of air and the speed of response to changes in flow rate;

c) to determine the head loss coefficient for the outlet for use in the hydraulic design of siphonic systems in which such outlets are installed.

The rating curve of the outlet depends on the design of the outlet and the flow conditions approaching the outlet. For a given rate of flow, the depth is greater in a gutter than on a flat roof and tends to increase as the width of the gutter is reduced. Therefore the layouts tested in **B.2** should include the most critical conditions in which the outlet will be installed. The test procedures do not cover the performance and flow capacity of the siphonic pipework; this varies from system to system depending on the particular geometry and pipe characteristics of each design.

B.2 Test method for determining rating curve of outlet

B.2.1 Install the outlet centrally in a tank containing a section of horizontal floor that is level with the lip of the outlet and does not deviate from the horizontal by more than ±5 mm. The total area of the water surface in the test tank should be between 3 m^2 and 10 m^2.

B.2.2 For simulating conditions on a flat roof, the horizontal floor should be either square or circular, with its overall dimensions being not less than 1.75 m. For a circular floor, the flow should be introduced smoothly around the perimeter; for a square floor, the flow should be introduced smoothly on two opposite sides or around all four sides.

B.2.3 For simulating conditions in gutters, the horizontal floor should be either rectangular or square, with the width of flow restricted so as to represent the required cross-sectional shape of gutter. The overall length of the floor parallel with the centre-line of the gutter should be not less than 1.75 m. Facilities should be provided for introducing the flow smoothly at either one or both ends of the gutter. When tested with flow from one direction, the horizontal distance between the centre of the outlet and the vertical end of the gutter should be equal to the diameter of the external strainer.

Licensed to [RESTU FILAELY], [PT. WAHANA DUTA JAYA RUCIKA]. Not to be distributed/networked. If you need multi-user/network access visit www.bsigroup.com/license

B.2.4 The outlet should be connected to a tailpipe with a vertical section followed by a horizontal section having a minimum length of 2 m. The tailpipe should include a transparent length for observation of flow conditions and entrained air, and the vertical section below its joint with the outlet should be of constant nominal diameter. The section of vertical pipe in the tailpipe should have the largest diameter (and corresponding minimum vertical drop) that will be used with this type of outlet in site installations. (If a lesser value of minimum drop is used when the outlet is connected to a vertical pipe of smaller diameter, a separate check of this combination under non-steady flow conditions should be made in accordance with **B.2.8**.)

B.2.5 The tailpipe should be connected to a length of vertical downpipe that in turn discharges into an open tank. The diameter of the downpipe should not be less than 75% of the diameter of the largest pipe in the tailpipe. The dimensions and length of the downpipe should be chosen so as to enable the outlet to discharge the maximum rate of flow for which the outlet will be used. All joints in the system should be airtight. If appropriate, a valve may be installed near the downstream end of the system so that the pipework can be arranged to flow full at all discharge rates.

B.2.6 Steady flow tests should be carried out at a minimum of five discharge rates covering the required range of operating conditions. The total flow rate should be measured to an accuracy of ±2%. Water depths should be measured to an accuracy of ±1 mm at a minimum of two points located (150 ± 5) mm from the lip of the outlet. When testing a flat-roof configuration, the measuring points should be on opposite sides of the outlet. When testing a gutter configuration, the measuring points should be on the centreline of the gutter and on opposite sides of the outlet. At each value of flow rate required for the rating curve, the test should be continued until the water level in the test tank become constant; if the water level fluctuates with time, the maximum depth occurring should be used for the rating curve. For outlets in gutters, separate rating curves should be obtained for flow from two directions and from one direction (see **B.2.3**).

B.2.7 In each flow test, observations should be made of any swirling of flow at the outlet and any tendency for air to be drawn into the pipework.

B.2.8 A non-steady test should be carried out on each configuration by increasing the flow rate from zero to the maximum value of the rating curve in a period of 15 s. The flow rate should then be kept constant at the maximum value for 5 min. The maximum water depth occurring during the test should be recorded to an accuracy of ±1 mm. The maximum amount by which the water depth exceeds the corresponding steady-state value obtained from **B.2.6** should not be greater than:

$$\Delta y_{max} = \frac{0.005 Q_{max}}{S} \qquad \text{(B.1)}$$

B.3 Test method for determining loss coefficient of outlet

B.3.1 Tests to determine the head loss coefficient of a siphonic outlet should be carried out in a tank conforming to the dimensional recommendations given in **B.2.1** and **B.2.2**.

B.3.2 The outlet should be connected to a vertical downpipe of constant diameter with a minimum length of 3 m and an internal diameter that does not differ from that of the outlet by more than ±2 mm. To allow a reliable assessment of the flow rate at which full-bore flow conditions are achieved, the downpipe should include a transparent section with a length not less than 1 m. Two or more piezometers should be connected to the downpipe to determine the head loss associated with the outlet. The top piezometer should be a minimum of ten internal pipe diameters below the joint between the outlet and the downpipe. The bottom piezometer should be a minimum distance of ten internal pipe diameters below the top piezometer, and the section of pipe between them should contain no joints. The piezometers should be calibrated and be capable of measuring pressures within the downpipe to an accuracy of ±2.5 mm water head or better. The vertical distance between the bottom piezometer and the point of discharge should be not less than 0.5 m. The downpipe should discharge freely into air and not be restricted at any point by a valve, bend or other device.

B.3.3 At flow rates used to determine its head loss coefficient, the siphonic outlet should be capable of producing full-bore flow conditions over the whole length of the downpipe, without any restriction at the point of discharge. The flow rates used should not exceed the maximum value in the rating curve of the outlet determined in accordance with **B.2**.

B.3.4 Pressures in the downpipe should be measured with the piezometers at one or more flow rates. The roughness value, k_P, of the pipe should be calculated from the Colebrook–White equation (see Annex A) using the difference in pressure between the piezometers and taking account of the vertical height between them. If the calculated value of k_P differs significantly from published data for the type of pipe being used, the piezometers should be checked and the test repeated until consistent results are achieved. The value of k_P should then be used to calculate the frictional head loss, Δh_F, over the total length of the downpipe. The head loss, Δh_o, due to the outlet is determined from:

$$\Delta h_o = H_B - \Delta h_F - \frac{u_E^2}{2g} \qquad \text{(B.2)}$$

The non-dimensional loss coefficient, ζ_o, of the outlet is given by:

$$\zeta_o = \frac{2g\Delta h_o}{u_E^2} \qquad \text{(B.3)}$$

Licensed to [RESTU FILAELY], [PT. WAHANA DUTA JAYA RUCIKA]. Not to be distributed/networked. If you need multi-user/network access visit www.bsigroup.com/license

Licensed to [RESTU FILAELY], [PT. WAHANA DUTA JAYA RUCIKA]. Not to be distributed/networked. If you need multi-user/network access visit www.bsigroup.com/license

Annex C (informative) Simplified checking procedure for siphonic systems

C.1 General

This annex describes a procedure that may be followed to make an approximate check of the flow capacity of an existing siphonic system or of a proposed design.

C.2 Calculation procedure

C.2.1 Determine the value of rainfall intensity, r, used for the design of the siphonic system, and if necessary compare against the recommendations in BS EN 12056-3:2000, National Annex NB.

C.2.2 Calculate the effective catchment area, A, draining to each outlet of the system using the recommendations in BS EN 12056-3:2000.

C.2.3 Calculate the design flow rate, Q_o, (see **6.1.3**) entering each outlet:

$$Q_o = S_F r A \tag{C.1}$$

C.2.4 Determine from drawings or survey data the available head, H_A, acting on the siphonic system (see **6.2**).

C.2.5 Prepare a sketch of the pipe run from the most upstream outlet of the system to the point of discharge, and identify the sections of different internal pipe diameter, d_i, and their respective lengths, L_P. Use the values of Q_o entering from each outlet to find the flow rate, Q_P, in each of the pipe sections identified in the sketch.

C.2.6 Calculate the frictional head loss gradient, i_F, in each section of pipe using the Colebrook–White equation with a roughness value of $k_P = 0.15$ mm. This can be done using equation (A.3) or suitable tables or charts [2]. Calculate the frictional head loss, Δh_F, in each pipe length from equation (A.2).

C.2.7 Add together the values of Δh_F for all the sections of pipe in the run to find the total frictional loss, H_{TF}.

C.2.8 To make an approximate allowance for the additional head losses due to pipe fittings in the run, assume that the total head loss, H_T, is given by:

$$H_T = 1.4 H_{TF} \tag{C.2}$$

C.2.9 Calculate the flow velocity, u, in the last section of siphonic pipe at the point of discharge from the system. Calculate the corresponding velocity head, H_V, from:

$$H_V = \frac{u^2}{2g} = 0.051 u^2 \tag{C.3}$$

C.2.10 The available head, H_A, for the system is likely to be sufficient for the required design rate of flow if:

$$H_A > H_T + H_V \tag{C.4}$$

C.2.11 If the available head does not appear to be sufficient, more detailed checking of the design is necessary.

C.2.12 The minimum pressure occurring in the system can be checked approximately by calculating the total frictional head loss, H_D, in the section of pipe between the point of discharge from the system and the top of the vertical downpipe. If the lip of the siphonic outlets is at a height, Z_D, above the top of the vertical downpipe, the minimum pressure head, h_M, in the system can be estimated as:

$$h_M = H_D + Z_D - H_A \quad \text{(C.5)}$$

C.2.13 If the value of h_M is lower (i.e. more negative) than −7.8 m water head (relative to atmospheric pressure), there is a possible risk of cavitation and a more detailed check of the design is necessary.

Licensed to [RESTU FILAELY], [PT. WAHANA DUTA JAYA RUCIKA]. Not to be distributed/networked. If you need multi-user/network access visit www.bsigroup.com/license

Licensed to [RESTU FILAELY], [PT. WAHANA DUTA JAYA RUCIKA]. Not to be distributed/networked. If you need multi-user/network access visit www.bsigroup.com/license

Bibliography

[1] MAY, R.W.P. *Design criteria for siphonic roof drainage systems*. Report SR 654. Wallingford, England: HR Wallingford, 2004.

[2] BARR, D.I.H., and HR Wallingford. *Tables for the hydraulic design of pipes, sewers and channels – Volume 1*. Seventh edition. London: Thomas Telford, 1998.

[3] IDELCHIK, I.E. *Handbook of hydraulic resistance*. Washington: Hemisphere Publishing Corporation, 1986. (Distribution outside North America: Springer-Verlag, Berlin.)

[4] MILLER, D.S. *Internal flow systems*. Second edition. Cranfield, England: BHR Group, 1990.

[5] GREAT BRITAIN. Construction (Design and Management) Regulations 1994. London: HMSO. Statutory Instrument 1994 No. 3140.

[6] MAY, R.W.P. *Cavitation in hydraulic structures – Occurrence and prevention*. Report SR 79. Wallingford, England: HR Wallingford, 1987.

[7] KNAPP, R.T., DAILY J.W. and HAMMITT F.G. *Cavitation*. New York: McGraw-Hill Book Co., 1970.

Further reading

ARTHUR, S. and SWAFFIELD, J.A. Siphonic roof drainage system analysis utilising unsteady flow theory. *Building and environment*, 2001, Vol. 36, pp 939–948.

ARTHUR, S. and SWAFFIELD, J.A. Siphonic roof drainage: the state of the art. *Urban water*, 2001, Vol. 3, No. 1, pp 43–52.

BRAMHALL, M.A. and SAUL, A.J. *Hydraulic performance of syphonic rainwater outlets*. Sydney, Australia: 8th International Conference on Urban Storm Drainage, 1999, Vol. 2, pp 786–792.

HANSLIN, R. *Siphonic roof drainage system*. CIB W62, Seminar 1993.

MAY, R.W.P. and ESCARAMEIA, M. *Performance of siphonic drainage systems for roof gutters*. Report SR 463. Wallingford, England: HR Wallingford, 1996.

SWAFFIELD, J.A., ARTHUR, S. and MAY, R.W.P. *Priming of a siphonic roof drainage system*. CIB W62, Rotterdam: Proceedings of Water Supply and Drainage for Buildings, 1998.

WEARING, M.J., BAKER, R., SHUTTLEWORTH, A.B. and BARDOT, J. *Flow into modular plastic box structures from siphonic and other high flow drainage systems*. Coventry University: Proceedings of the Third International Conference on Sustainable Drainage, 2005.

WRIGHT, G.B., SWAFFIELD, J.A. and ARTHUR, S. The performance characteristics of multi-outlet siphonic roof drainage systems. *Building services engineering research and technology*, 2002, Vol. 23, No. 3, pp 127–141.

Licensed to [RESTU FILAELY], [PT. WAHANA DUTA JAYA RUCIKA]. Not to be distributed/networked. If you need multi-user/network access visit www.bsigroup.com/license

BSI – British Standards Institution

BSI is the independent national body responsible for preparing British Standards. It presents the UK view on standards in Europe and at the international level. It is incorporated by Royal Charter.

Revisions

British Standards are updated by amendment or revision. Users of British Standards should make sure that they possess the latest amendments or editions.

It is the constant aim of BSI to improve the quality of our products and services. We would be grateful if anyone finding an inaccuracy or ambiguity while using this British Standard would inform the Secretary of the technical committee responsible, the identity of which can be found on the inside front cover.
Tel: +44 (0)20 8996 9000. Fax: +44 (0)20 8996 7400.

BSI offers members an individual updating service called PLUS which ensures that subscribers automatically receive the latest editions of standards.

Buying standards

Orders for all BSI, international and foreign standards publications should be addressed to Customer Services. Tel: +44 (0)20 8996 9001.
Fax: +44 (0)20 8996 7001. Email: orders@bsi-global.com. Standards are also available from the BSI website at http://www.bsi-global.com.

In response to orders for international standards, it is BSI policy to supply the BSI implementation of those that have been published as British Standards, unless otherwise requested.

Information on standards

BSI provides a wide range of information on national, European and international standards through its Library and its Technical Help to Exporters Service. Various BSI electronic information services are also available which give details on all its products and services. Contact the Information Centre. Tel: +44 (0)20 8996 7111.
Fax: +44 (0)20 8996 7048. Email: info@bsi-global.com.

Subscribing members of BSI are kept up to date with standards developments and receive substantial discounts on the purchase price of standards. For details of these and other benefits contact Membership Administration. Tel: +44 (0)20 8996 7002.
Fax: +44 (0)20 8996 7001. Email: membership@bsi-global.com.

Information regarding online access to British Standards via British Standards Online can be found at http://www.bsi-global.com/bsonline.

Further information about BSI is available on the BSI website at http://www.bsi-global.com.

Copyright

Copyright subsists in all BSI publications. BSI also holds the copyright, in the UK, of the publications of the international standardization bodies. Except as permitted under the Copyright, Designs and Patents Act 1988 no extract may be reproduced, stored in a retrieval system or transmitted in any form or by any means – electronic, photocopying, recording or otherwise – without prior written permission from BSI.

This does not preclude the free use, in the course of implementing the standard, of necessary details such as symbols, and size, type or grade designations. If these details are to be used for any other purpose than implementation then the prior written permission of BSI must be obtained.

Details and advice can be obtained from the Copyright & Licensing Manager.
Tel: +44 (0)20 8996 7070. Fax: +44 (0)20 8996 7553.
Email: copyright@bsi-global.com.

British Standards

389 Chiswick High Road
London
W4 4AL