Izaac Facundo

Imf339

HW7

Code snippets:

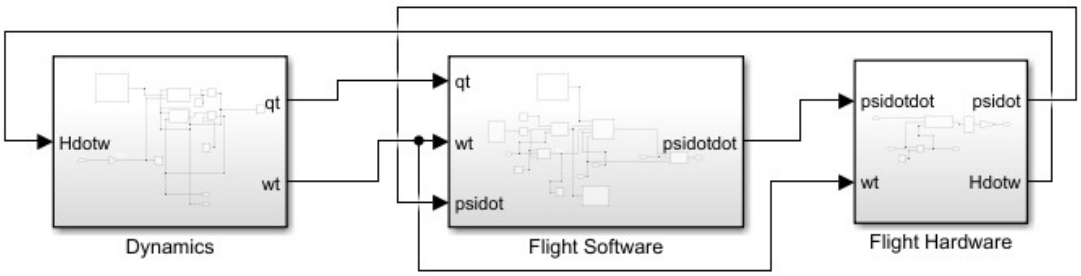

DYNAMICS

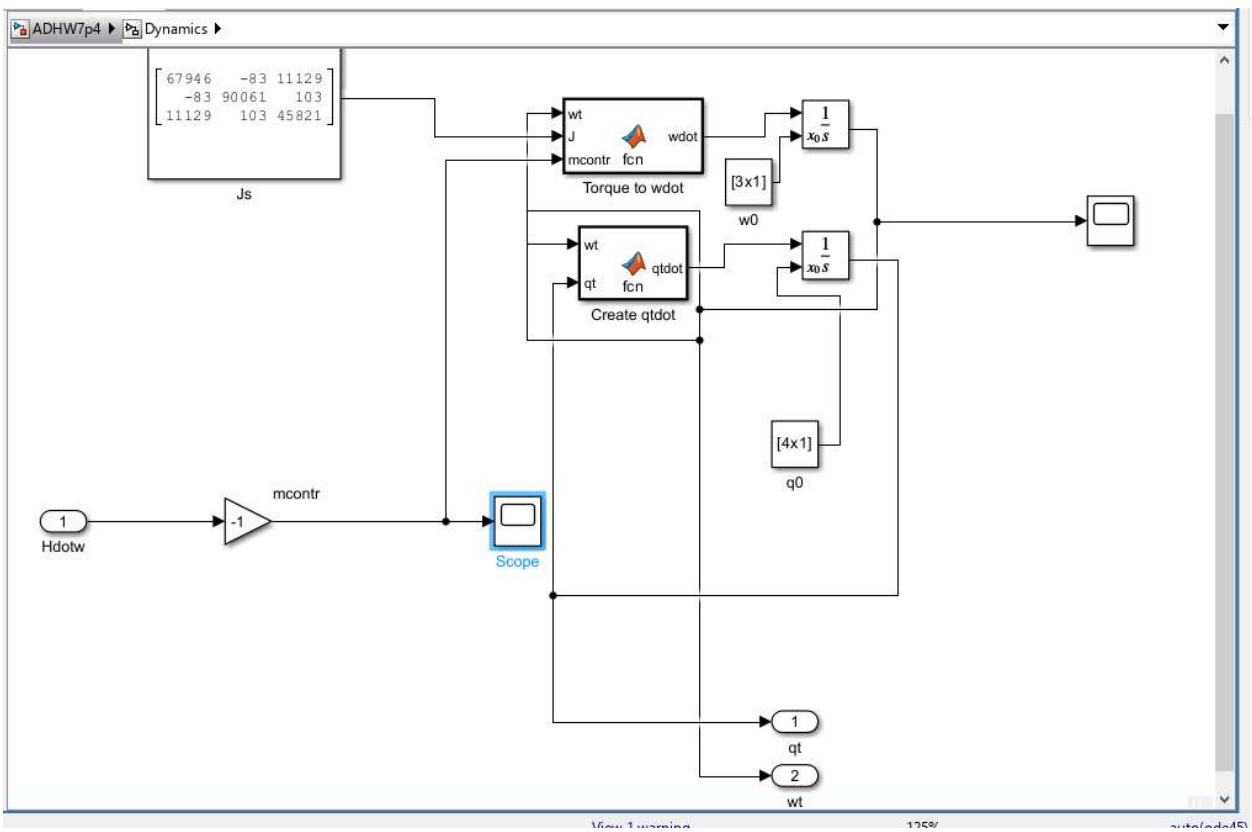

```
function wdot = fcn(wt,J,mcontr)

wdot = inv(J)*(mcontr - cross(wt, J*wt));
```

7p4 ▸ Dynamics ▸ Create qtdot

```
function qtdot = fcn(wt,qt)
v1 = zeros(4,1);
v1(1:3) = wt;
v1(4) = 0;
qtdot = qmult(0.5 * v1, qt);



end



function q3 = qmult(q2,q1)

q3 = [q2(4).*q1(1:3) + q1(4).*q2(1:3) - cross(q2(1:3),q1(1:3));
    q2(4)*q1(4) - dot(q2(1:3),q1(1:3))];

end
```

FLIGHT SOFTWARE

ADHW7p4 ▸ Flight Software ▸

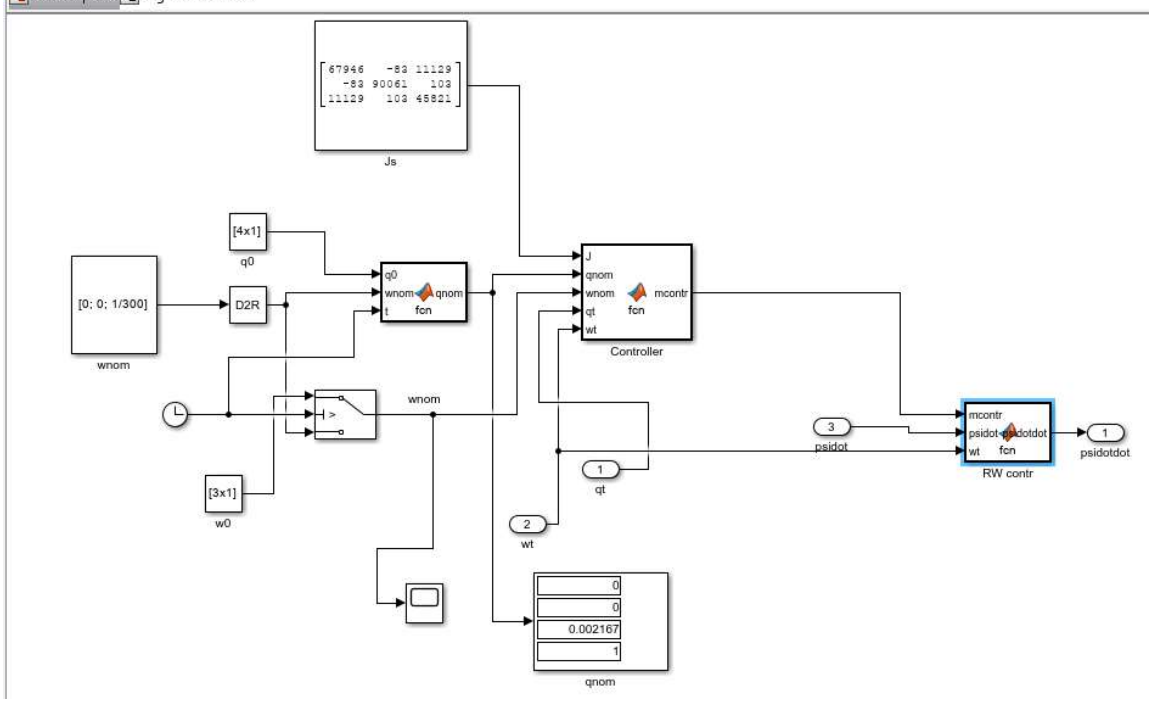

ADHW7p4 ▸ Flight Software ▸ MATLAB Function1

```
function qnom = fcn(q0,wnom,t)
if t < 900
    thetatot = norm(wnom)*t;
else
    thetatot = norm(wnom)*900;
end
e = wnom ./ norm(wnom);

qtotv = sin(thetatot/2)*e;
qtots = cos(thetatot/2);

qtot = [qtotv; qtots];

qnom = qmult(qtot,q0);



function q3 = qmult(q2,q1)

q3 = [q2(4).*q1(1:3) + q1(4).*q2(1:3) - cross(q2(1:3),q1(1:3));
    q2(4)*q1(4) - dot(q2(1:3),q1(1:3))];
```

W7p4 ▸ Flight Software ▸ Controller

```
function mcontr = fcn(J,qnom,wnom,qt,wt)

qtconj = qt;
qtconj(1:3) = -qt(1:3);
qerr = qmult(qnom,qtconj);

error = (2/qerr(4))*qerr(1:3);

werr = wnom - wt;

derror = -skewsymmetric(wnom)*error + werr;

Kd = 0.1;
Kp = 0.1;

u = Kd*derror + Kp*error;

mcontr = J*u;

end
function q3 = qmult(q2,q1)

q3 = [q2(4).*q1(1:3) + q1(4).*q2(1:3) - cross(q2(1:3),q1(1:3));
    q2(4)*q1(4) - dot(q2(1:3),q1(1:3))];

end

function ssmatrix = skewsymmetric(vector)

ssmatrix = [0 -vector(3) vector(2);
            vector(3) 0 -vector(1);
            -vector(2) vector(1) 0];

end
```

7p4 ▸ Flight Software ▸ RW contr

```
function psidotdot = fcn(mcontr,psidot,wt)

Aw = .1295;
X = [0, (sqrt(3)/2)*cosd(30), (sqrt(3)/2)*cosd(30), 0, -(sqrt(3)/2)*cosd(30), -(sqrt(3)/2)*cosd(30);
    cosd(30), .5*cosd(30), -.5*cosd(30), -.5*cosd(30), -.5*cosd(30), .5*cosd(30);
    sind(30), sind(30), sind(30), sind(30), sind(30), sind(30)];

psidotdot = pinv(X)*((mcontr + Aw*skewsymmetric(wt)*X*psidot)/-Aw);

end

function ssmatrix = skewsymmetric(vector)

ssmatrix = [0 -vector(3) vector(2);
            vector(3) 0 -vector(1);
            -vector(2) vector(1) 0];

end
```

FLIGHT HARDWARE

DHW7p4 ▸ Flight Hardware ▸

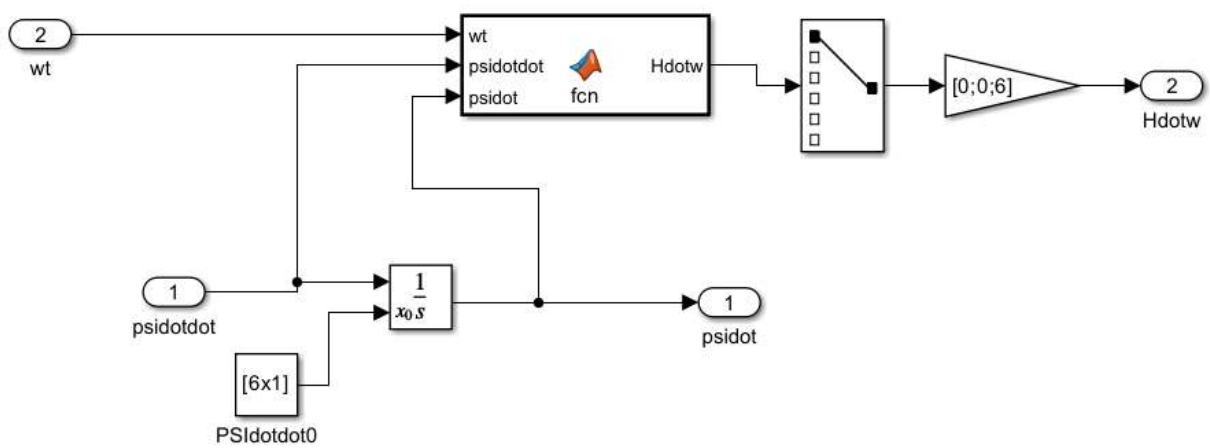

W7p4 ▸ Flight Hardware ▸ MATLAB Function

```
function Hdotw = fcn(wt,psidotdot,psidot)

X = [0, (sqrt(3)/2)*cosd(30), (sqrt(3)/2)*cosd(30), 0, -(sqrt(3)/2)*cosd(30), -(sqrt(3)/2)*cosd(30);
    cosd(30), .5*cosd(30), -.5*cosd(30), -.5*cosd(30), -.5*cosd(30), .5*cosd(30);
    sind(30), sind(30), sind(30), sind(30), sind(30), sind(30)];

Aw = 0.1295;
mrw = Aw.*psidotdot(1:3);

Hdotw = -pinv(X)*mrw - pinv(X)*skewsymmetric(wt)*X*(Aw*psidot);

end

function ssmatrix = skewsymmetric(vector)

ssmatrix = [0 -vector(3) vector(2);
            vector(3) 0 -vector(1);
            -vector(2) vector(1) 0];

end
```

1. Angular Velocity of satellite:

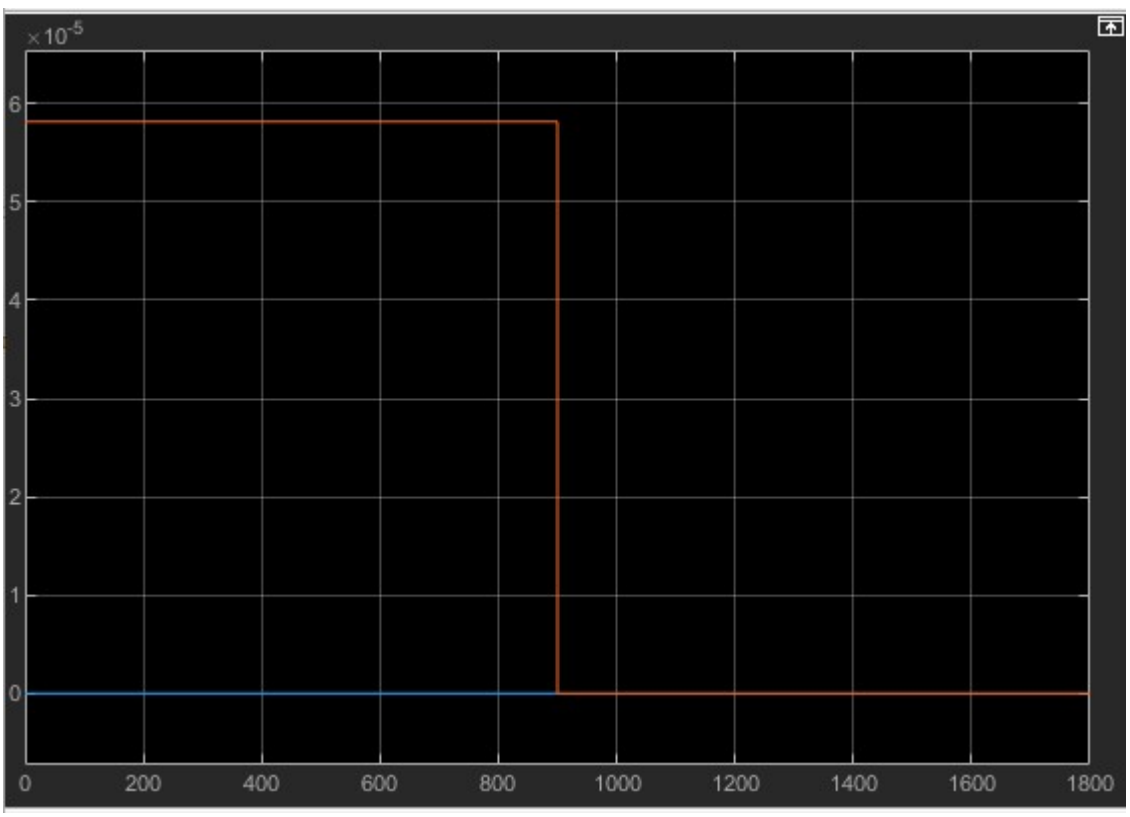

2. Quaternion vs time

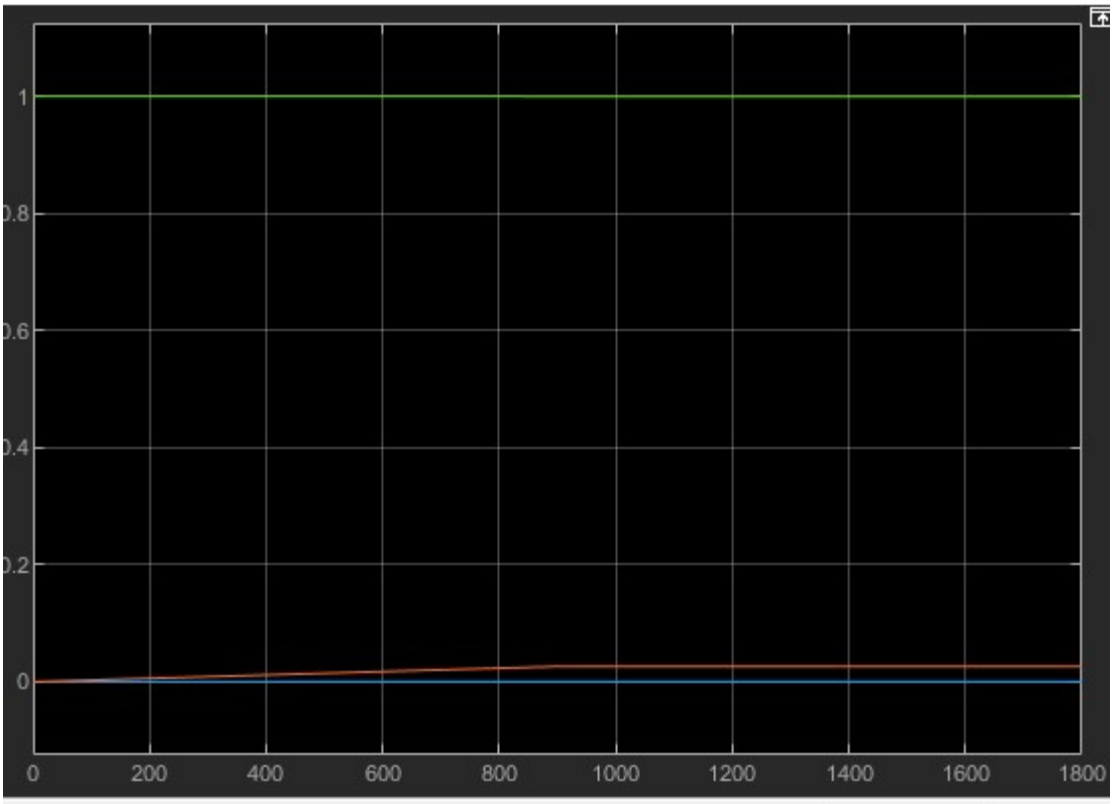

3. Angular Velocity of each wheel

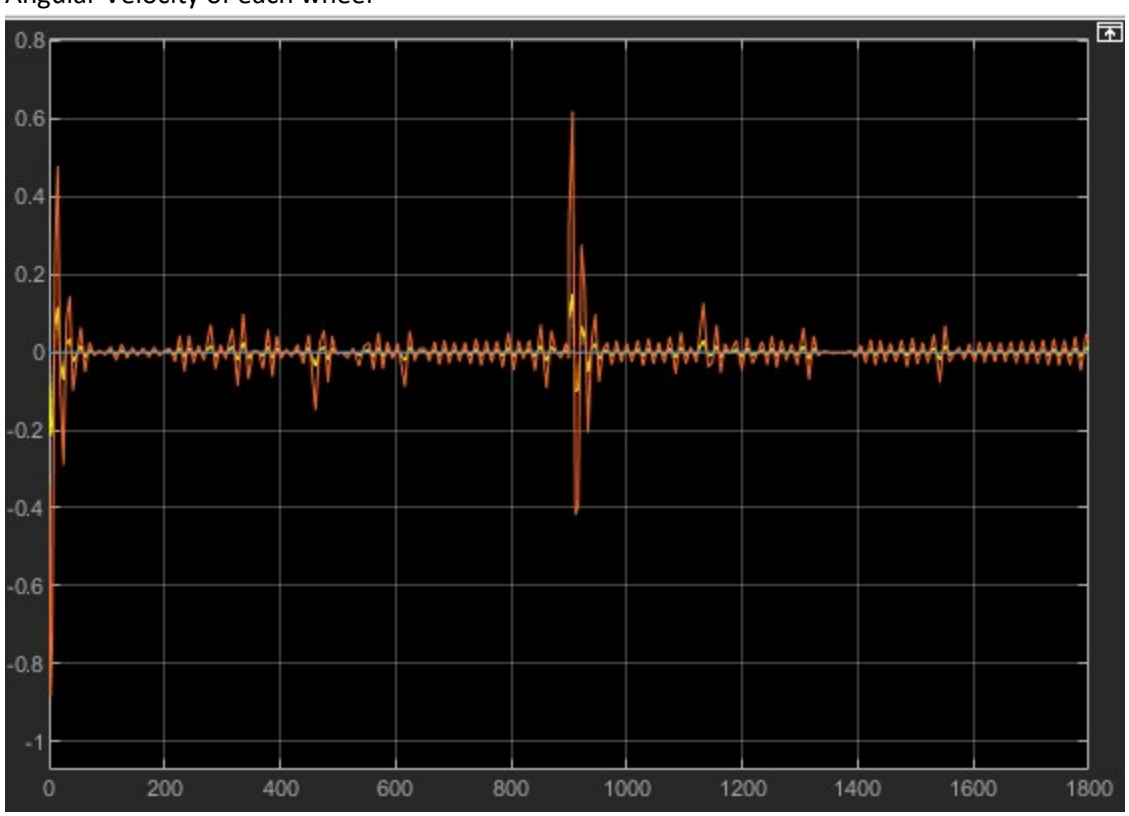

4. Torque generated by the wheels