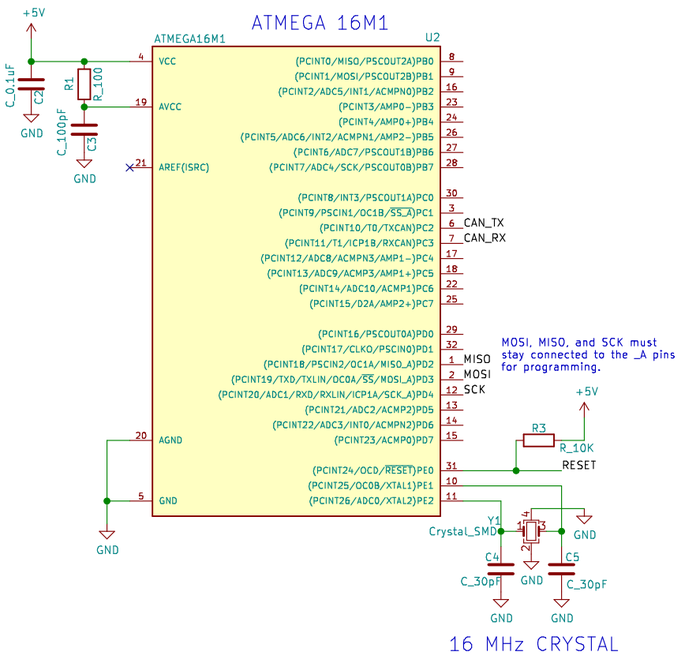

16 MHz CRYSTAL

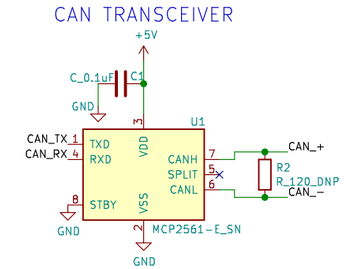

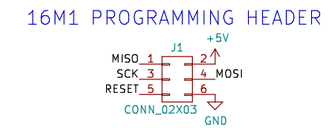

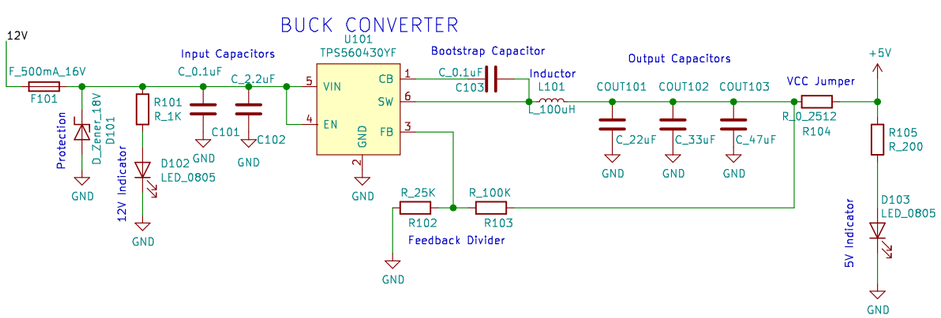

Wesley Soo-Hoo
Olin Electric Motorsports
Sheet: /
File: template.sch

Title: OEM Project Template

Size: B	Date: 2019-08-22	**Rev: 1**
KiCad E.D.A. kicad 5.1.7-a382d34a888ubuntu18.04.1		Id: 1/1