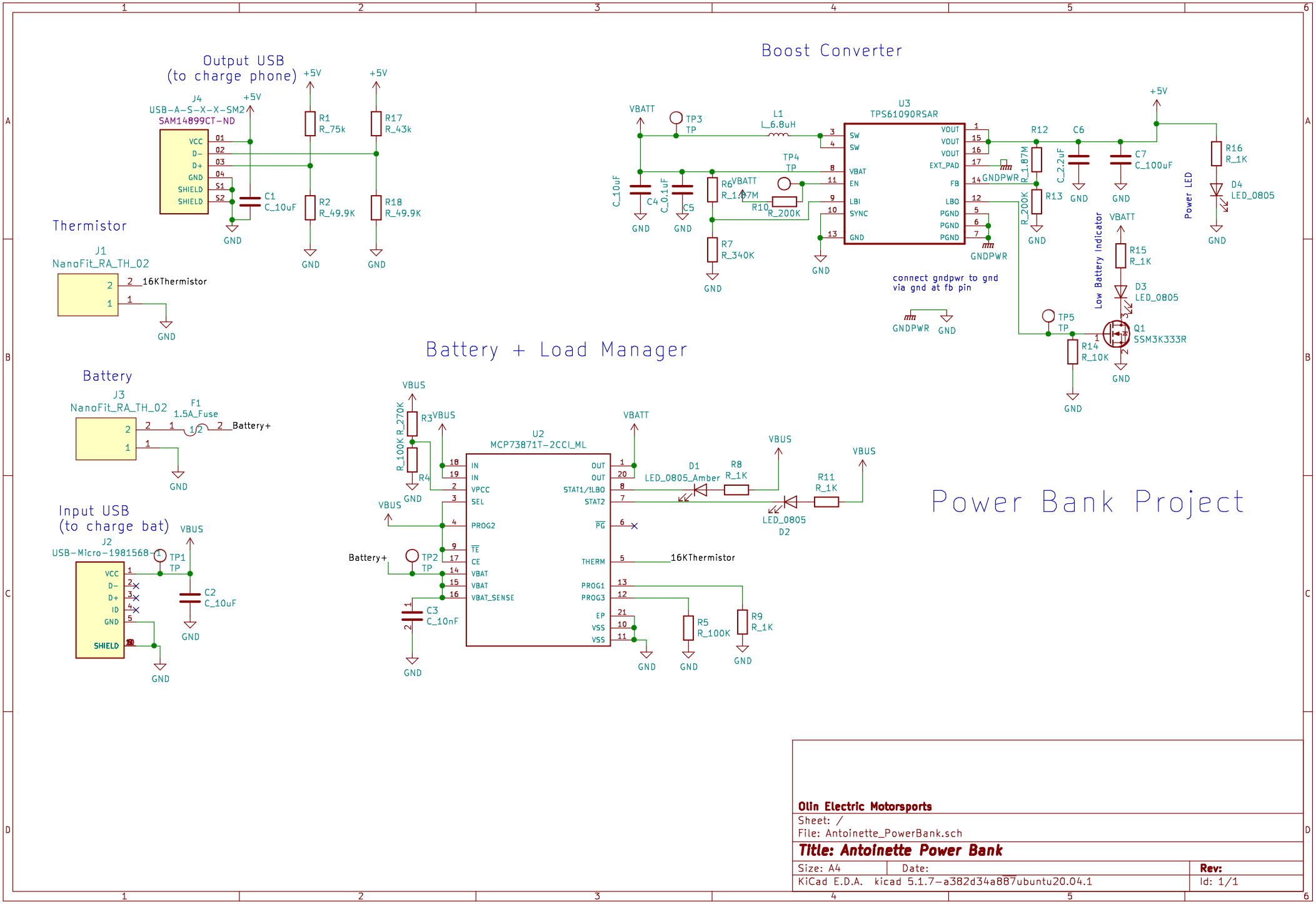
Output USB
(to charge phone)
J4
USB-A-S-X-X-SM2
SAM14899CT-ND
VCC
D-
D+
GND
SHIELD
SHIELD
+5V
R1
R_75k
R17
R_43k
C1
C_10uF
R2
R_49.9K
R18
R_49.9K
GND
Thermistor
J1
NanoFit_RA_TH_02
16KThermistor
Boost Converter
U3
TPS61090RSAR
VBATT
TP3
TP
L1
L_6.8uH
TP4
SW
VBAT
EN
LBI
SYNC
VOUT
EXT_PAD
FB
LBO
PGND
GND
GNDPWR
R12
R_1.87M
R13
R_200K
C6
C_2.2uF
C7
C_100uF
R16
R_1K
D4
LED_0805
Power LED
C_10uF
C4
C_0.1uF
C5
R6
R_1.87M
R10
R_200K
R7
R_340K
connect gndpwr to gnd
via gnd at fb pin
Low Battery Indicator
R15
R_1K
D3
LED_0805
TP5
Q1
SSM3K333R
R14
R_10K
Battery + Load Manager
Battery
J3
NanoFit_RA_TH_02
F1
1.5A_Fuse
Battery+
Input USB
(to charge bat)
J2
USB-Micro-1981568
TP1
C2
C_10uF
VBUS
R_270K
R3
R_100K
R4
U2
MCP73871T-2CCI_ML
IN
VPCC
SEL
PROG2
TE
CE
VBAT_SENSE
OUT
STAT1/!LBO
STAT2
PG
THERM
PROG1
PROG3
EP
VSS
D1
LED_0805_Amber
R8
R_1K
R11
R_1K
LED_0805
D2
TP2
C3
C_10nF
R5
R_100K
R9
R_1K
Power Bank Project
Olin Electric Motorsports
Sheet: /
File: Antoinette_PowerBank.sch
Title: Antoinette Power Bank
Size: A4
Date:
Rev:
KiCad E.D.A. kicad 5.1.7-a382d34a887ubuntu20.04.1
Id: 1/1