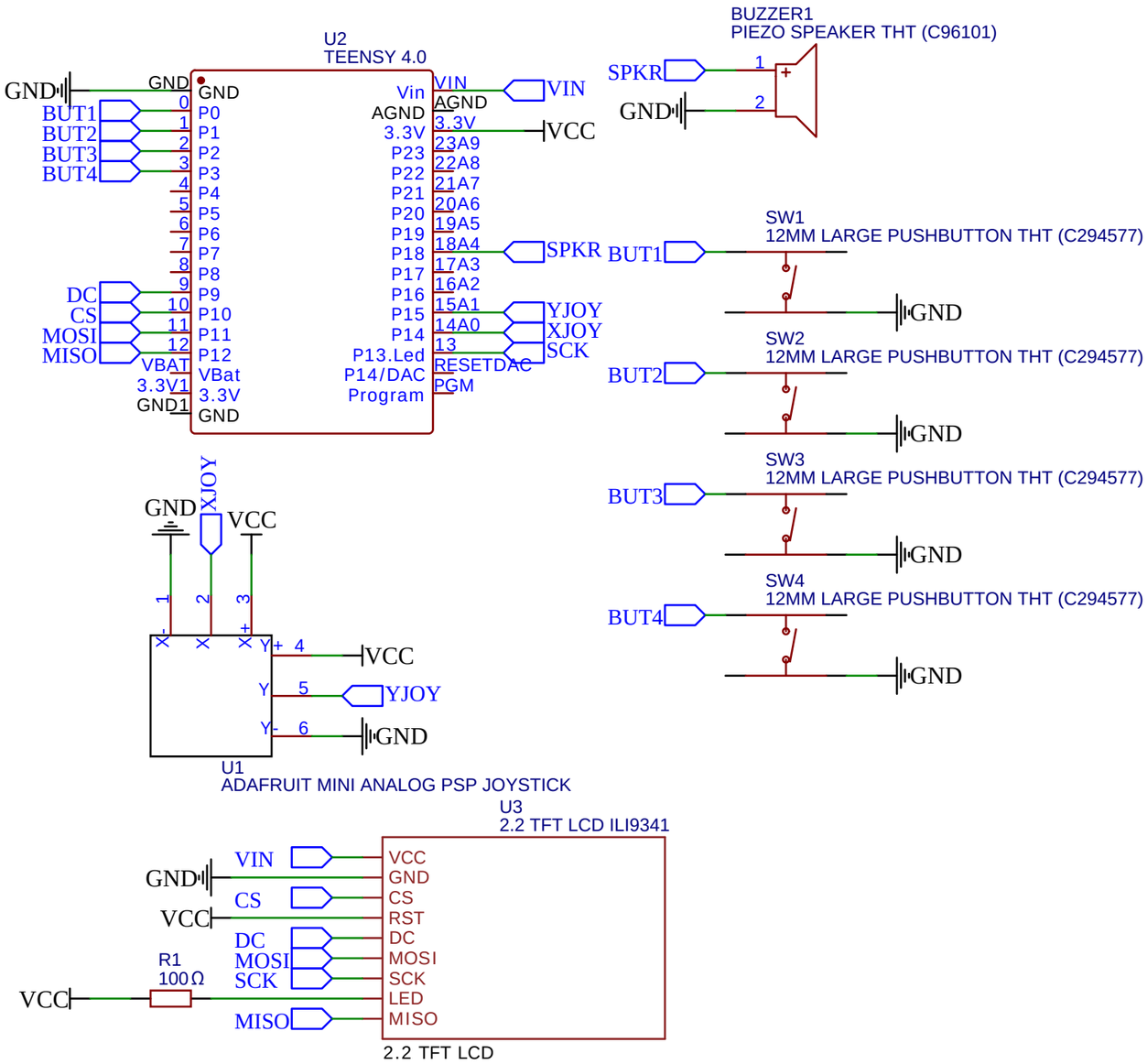

TITLE: Bell GamePad		REV: 1.0
EasyEDA	Company: Jason Bell	Sheet: 1/1
	Date: 2021-03-22 Drawn By: JasonB963	