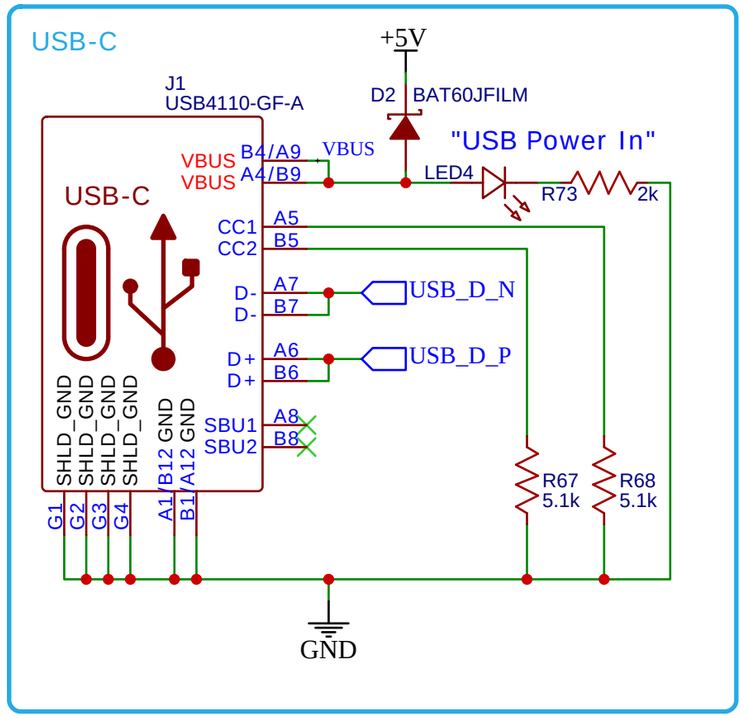

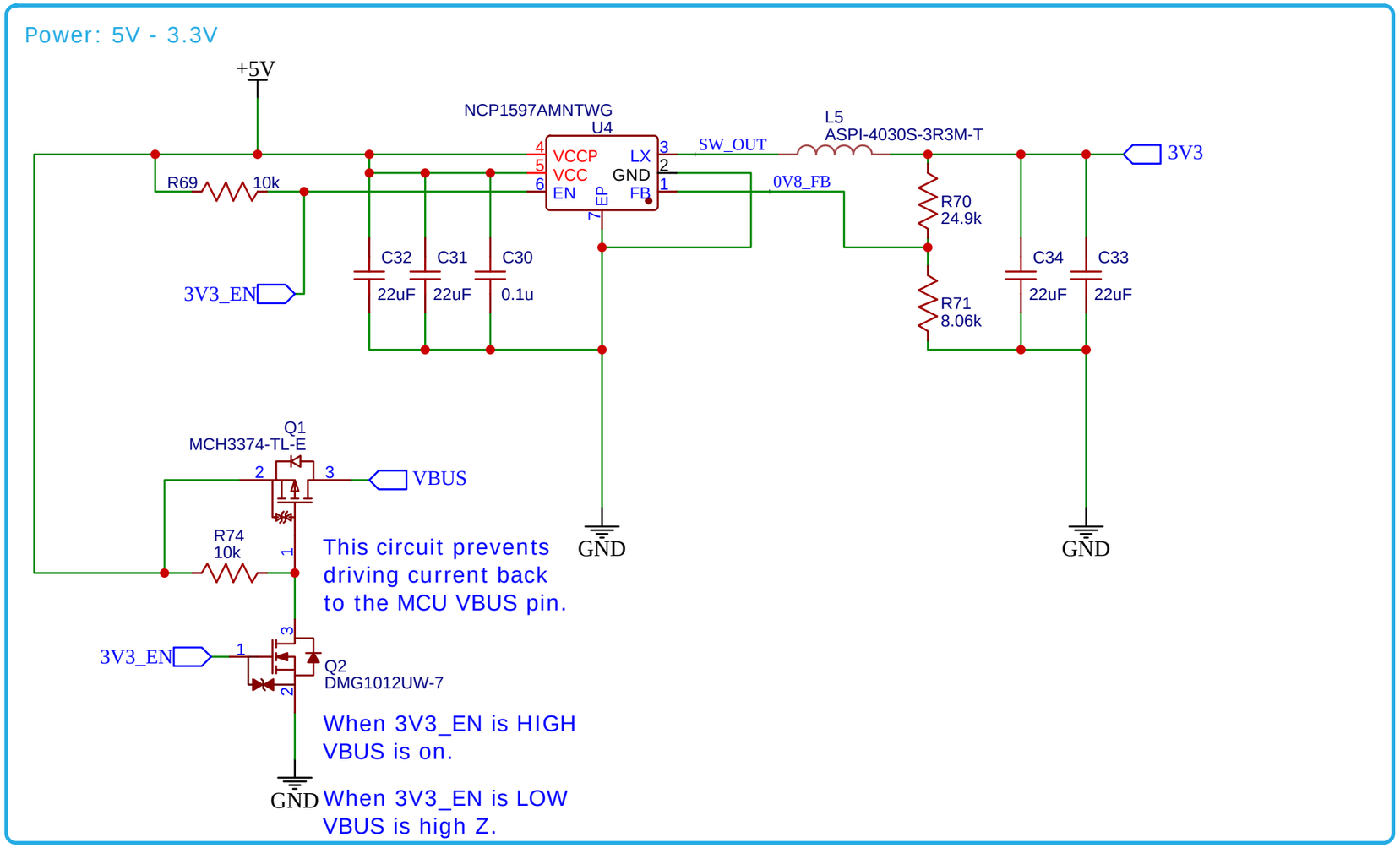

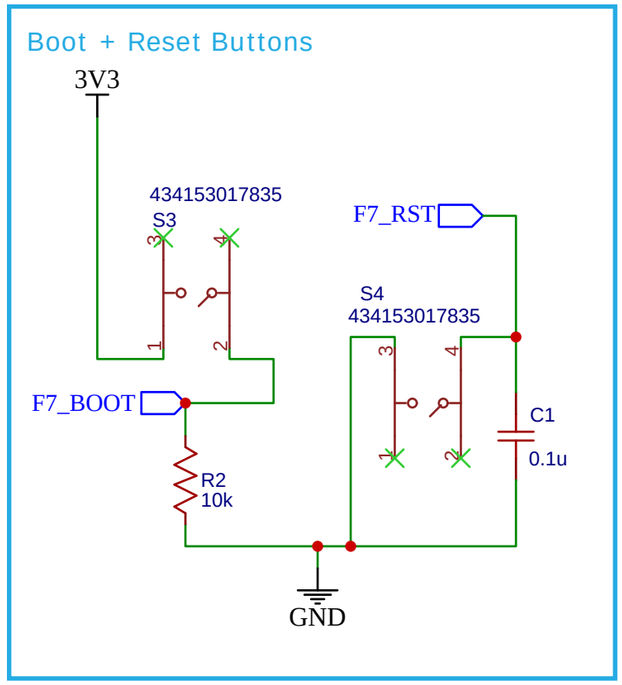

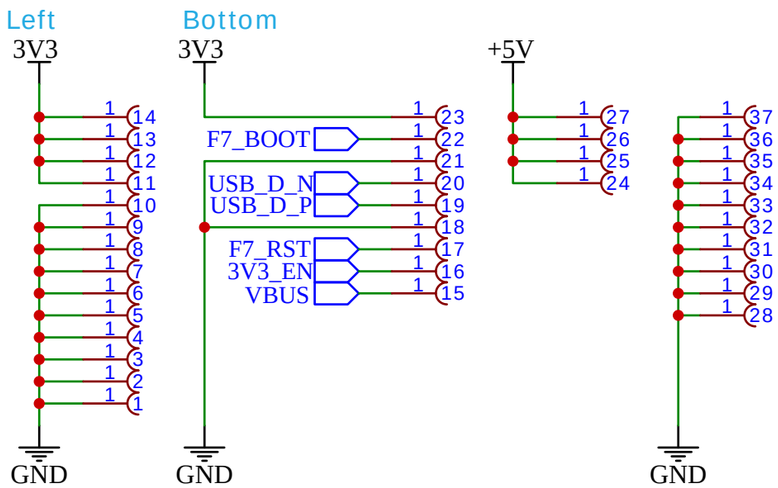

Stackup/Controlled Impedance:

USB: 90Ω Diff Pair
Outer layer: 0.19mm width, 0.11mm spacing
Inner layer: 0.13mm width, 0.11mm spacing
JLCPCB Stackup: JLC7628

TITLE: USB-C, Power, Boot, Reset Add-on	REV: v1.c
Company: Wilderness Labs	Sheet: 1/1
Date: 2022-12 Drawn By: bryan costanich	