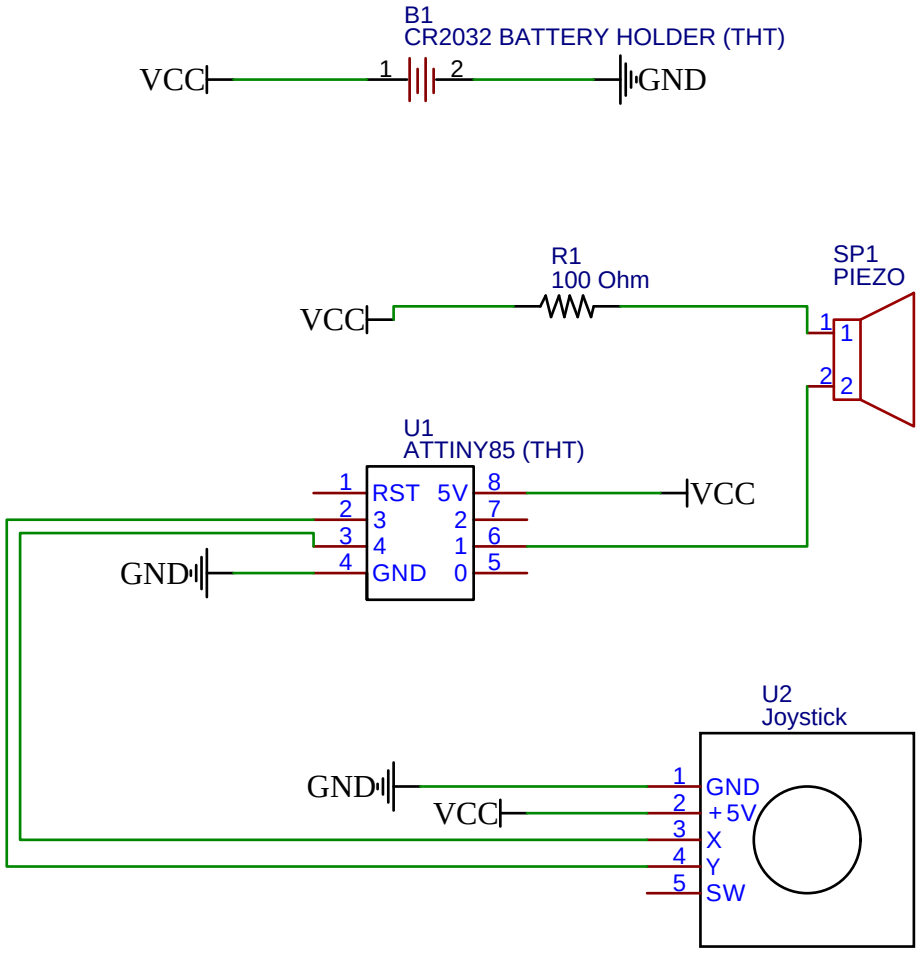

TITLE: ATcanis pettus

REV: 1.0

Company: Jason Bell

Sheet: 1/1

Date: 2021-02-03

Drawn By: JasonB963